Preface

Thank you for choosing DELTA's high-performance VFD-B Series. The VFD-B Series is manufactured with high-quality components and materials and incorporates the latest microprocessor technology available.

This manual is to be used for the installation, parameter setting, troubleshooting, and daily maintenance of the AC motor drive. To guarantee safe operation of the equipment, read the following safety guidelines before connecting power to the AC motor drive. Keep this operating manual at hand and distribute to all users for reference.

To ensure the safety of operators and equipment, only qualified personnel familiar with AC motor drive are to do installation, start-up and maintenance. Always read this manual thoroughly before using VFD-B series AC Motor Drive, especially the WARNING, DANGER and CAUTION notes. Failure to comply may result in personal injury and equipment damage. If you have any questions, please contact your dealer.

PLEASE READ PRIOR TO INSTALLATION FOR SAFETY.

DANGER!

1. AC input power must be disconnected before any wiring to the AC motor drive is made.
2. A charge may still remain in the DC-link capacitors with hazardous voltages, even if the power has been turned off. To prevent personal injury, please ensure that power has turned off before opening the AC motor drive and wait ten minutes for the capacitors to discharge to safe voltage levels.
3. Never reassemble internal components or wiring.
4. The AC motor drive may be destroyed beyond repair if incorrect cables are connected to the input/output terminals. Never connect the AC motor drive output terminals U/T1, V/T2, and W/T3 directly to the AC mains circuit power supply.
5. Ground the VFD-B using the ground terminal. The grounding method must comply with the laws of the country where the AC motor drive is to be installed. Refer to the Basic Wiring Diagram.
6. VFD-B series is used only to control variable speed of 3-phase induction motors, NOT for 1-phase motors or other purpose.
7. VFD-B series shall NOT be used for life support equipment or any life safety situation.

WARNING!

1. DO NOT use Hi-pot test for internal components. The semi-conductor used in AC motor drive easily damage by high-voltage.
2. There are highly sensitive MOS components on the printed circuit boards. These components are especially sensitive to static electricity. To prevent damage to these components, do not touch these components or the circuit boards with metal objects or your bare hands.
3. Only qualified persons are allowed to install, wire and maintain AC motor drives.

CAUTION!

1. Some parameters settings can cause the motor to run immediately after applying power.
2. DO NOT install the AC motor drive in a place subjected to high temperature, direct sunlight, high humidity, excessive vibration, corrosive gases or liquids, or airborne dust or metallic particles.
3. Only use AC motor drives within specification. Failure to comply may result in fire, explosion or electric shock.
4. To prevent personal injury, please keep children and unqualified people away from the equipment.
5. When the motor cable between AC motor drive and motor is too long, the layer insulation of the motor may be damaged. Please use a frequency inverter duty motor or add an AC output reactor to prevent damage to the motor. Refer to appendix B Reactor for details.
6. The rated voltage for AC motor drive must be ≤ 240V (≤ 480V for 460V models, ≤ 600V for 575V models) and the mains supply current capacity must be ≤ 5000A RMS (≤10000A RMS for the ≥ 40hp (30kW) models).

Table of Contents

Preface ..... **i**

Table of Contents ..... **iii**

Chapter 1 Introduction **1-1**

1.1 Receiving and Inspection 1-1

1.1.1 Nameplate Information 1-1

1.1.2 Model Explanation 1-1

1.1.3 Series Number Explanation 1-2

1.1.4 Drive Frames 1-2

1.2 Appearances 1-2

1.3 Preparation for Installation and Wiring 1-4

1.3.1 Remove Keypad 1-4

1.3.2 Remove Front Cover 1-6

1.4 Lifting 1-7

1.5 Storage 1-8

Chapter 2 Installation and Wiring **2-1**

2.1 Ambient Conditions 2-1

2.2 Installation 2-1

2.3 Dimensions 2-3

2.4 Wiring 2-12

2.4.1 Basic Wiring 2-13

2.4.2 External Wiring 2-18
2.4.3 Main Terminals Connections 2-19
2.4.4 Control Terminals 2-21
2.4.5 Main Circuit Terminals 2-26
Chapter 3 Start Up 3-1
3.1 Preparations before Start-up 3-1
3.2 Operation Method 3-2
3.3 Trial Run 3-2
Chapter 4 Digital Keypad Operation 4-1
4.1 Description of the Digital Keypad VFD-PU01 4-1
4.2 How to Operate the Digital Keypad VFD-PU01 4-3
Chapter 5 Parameters 5-1
5.1 Summary of Parameter Settings 5-2
5.2 Parameter Settings for Applications 5-18
5.3 Description of Parameter Settings 5-24
Chapter 6 Fault Code Information 6-1
6.1 Common Problems and Solutions 6-1
6.2 Reset 6-4
Chapter 7 Troubleshooting 7-1
7.1 Over Current (OC) 7-1
7.2 Ground Fault 7-2
7.3 Over Voltage (OV) 7-2
7.4 Low Voltage (Lv) 7-3
7.5 Over Heat (OH) 7-4
7.6 Overload 7-4

7.7 Display of PU01 is Abnormal 7-5
7.8 Phase Loss (PHL) 7-5
7.9 Motor cannot Run 7-6
7.10 Motor Speed cannot be Changed 7-7
7.11 Motor Stalls during Acceleration 7-8
7.12 The Motor does not Run as Expected 7-8
7.13 Electromagnetic/Induction Noise 7-9
7.14 Environmental Condition 7-9
7.15 Affecting Other Machines 7-10
Chapter 8 Maintenance and Inspections 8-1
Appendix A Specifications A-1
Appendix B Accessories B-1
B.1 All Braking Resistors & Braking Units Used in AC Motor Drives B-1
B.1.1 Dimensions and Weights for Braking Resistors B-3
B.1.2 Specifications for Braking Unit B-5
B.1.3 Dimensions for Braking Unit B-6
B.2 AMD - EMI Filter Cross Reference B-7
B.2.1 Dimensions B-11
B.3 PG Card (for Encoder) B-19
B.3.1 PG02 Installation B-19
B.3.2 PG03 ..... B-24
B.4 Remote Controller RC-01 ..... B-28
B.5 Remote Panel Adapter (RPA 01) B-29
B.6 AC Reactor B-30

B.6.1 AC Input Reactor Recommended Value B-30
B.6.2 AC Output Reactor Recommended Value B-31
B.6.3 Applications for AC Reactor B-33
B.7 Zero Phase Reactor (RF220X00A) B-35
B.8 DC Choke Recommended Values..... B-36
B.9 Non-fuse Circuit Breaker Chart B-38
B.10 Fuse Specification Chart B-39
B.11 PU06 ..... B-40
B.11.1 Description of the Digital keypad VFD-PU06 .....B-40
B.11.2 Explanation of Display Message B-40
B.11.3 Operation Flow Chart.....B-41
Appendix C How to Select the Right AC Motor Drive C-1
C.1 Capacity Formulas C-2
C.2 General Precaution C-4
C.3 How to Choose a Suitable Motor..... C-5

Chapter 1 Introduction

1.1 Receiving and Inspection

This VFD-B AC motor drive has gone through rigorous quality control tests at the factory before shipment. After receiving the AC motor drive, please check for the following:

- Check to make sure that the package includes an AC motor drive, the User Manual/Quick Start and CD, dust covers and rubber bushings.
- Inspect the unit to assure it was not damaged during shipment.
- Make sure that the part number indicated on the nameplate corresponds with the part number of your order.

1.1.1 Nameplate Information

Example for 1HP/0.75kW 3-phase 230V AC motor drive

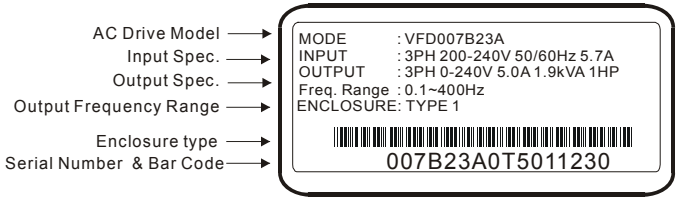

1.1.2 Model Explanation

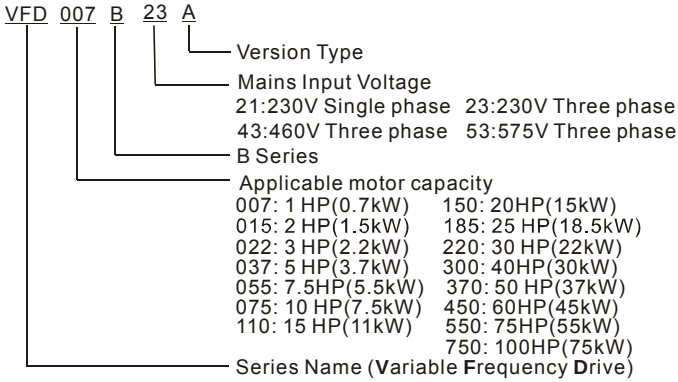

1.1.3 Series Number Explanation

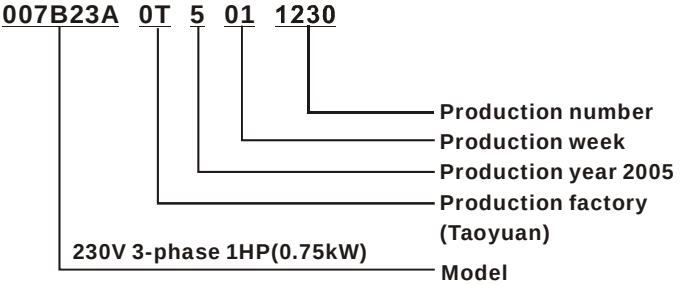

If the nameplate information does not correspond to your purchase order or if there are any problems, please contact your distributor.

1.1.4 Drive Frames

Frame	Power range	Models
A	1hp (0.75kW)	VFD007B23A/43A/53A
A1	1-2hp (0.75-1.5kW)	VFD007B21A, VFD015B21A/23A/43A/53A
A2	2-3hp (1.5-2.2kW)	VFD015B21B/23B, VFD022B23B/43B/53A
B	3-5hp (2.2-3.7kW)	VFD022B21A, VFD037B23A/43A/53A
C	7.5-15hp (5.5-11kW)	VFD055B23A/43A/53A, VFD075B23A/43A/53A, VFD110B23A/43A/53A
D	20-30hp (15-22kW)	VFD150B23A/43A/53A, VFD185B23A/43A/53A, VFD220B23A/43A/53A
E	40-60hp (30-45kW)	VFD300B43A/53A, VFD370B43A/53A, VFD450B43A/53A
E1	40-100hp (30-75kW)	VFD300B23A, VFD370B23A, VFD550B43C/53A, VFD750B43C/53A
F	75-100hp (55-75kW)	VFD550B43A, VFD750B43A

Please refer to Chapter 2.3 for exact dimensions.

1.2 Appearances

(Refer to chapter 2.3 for exact dimensions)

1-3HP/0.75-2.2kW (Frame A, A1, A2)

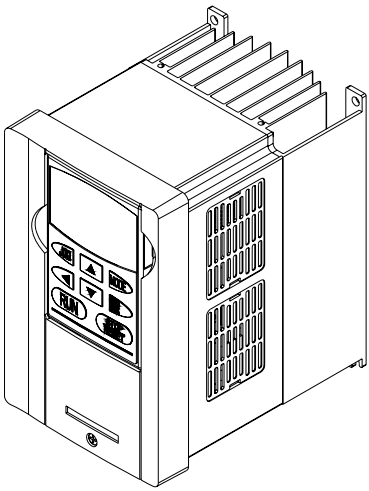

3-5HP/2.2-3.7kW (Frame B)

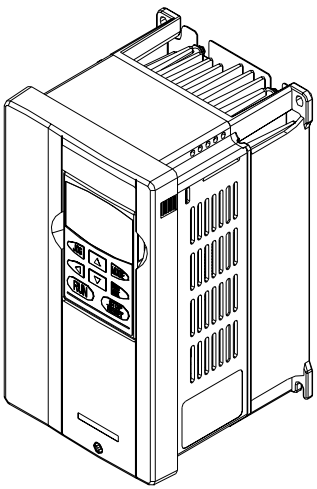

7.5-15HP/5.5-11kW (Frame C)

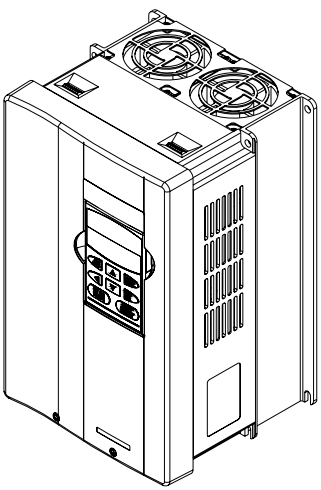

20-30HP/15-22kW (Frame D)

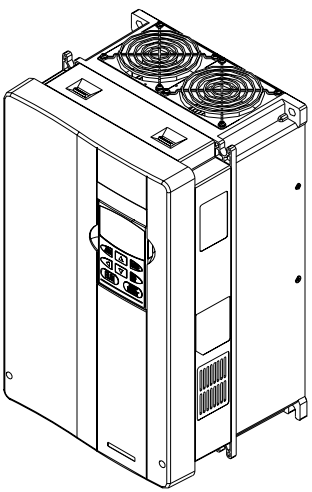

40-100HP/30-75kW (Frame E, E1)

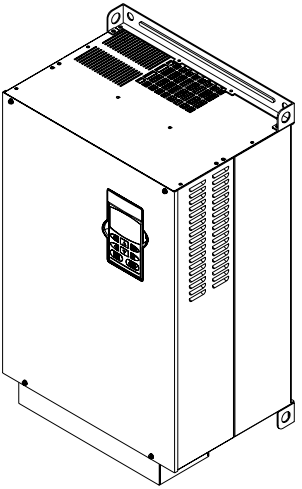

75-100HP/55-75kW (Frame F)

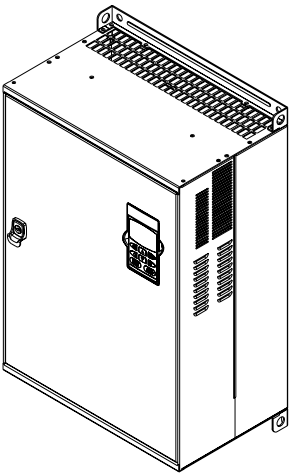

1.3 Preparation for Installation and Wiring

1.3.1 Remove Keypad

1-3HP/0.75-2.2kW (Frame A, A1, A2)

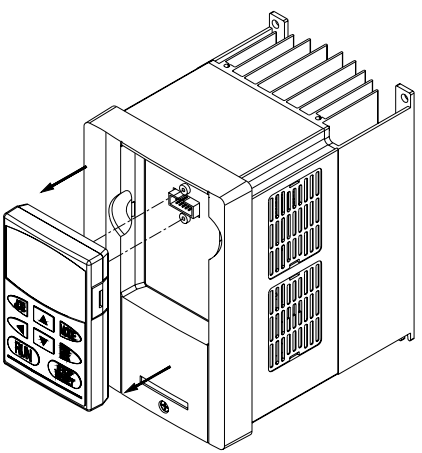

3-5HP/2.2-3.7kW (Frame B)

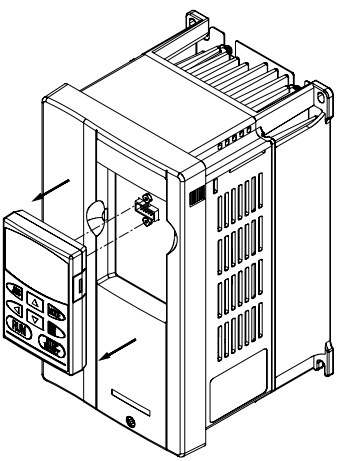

7.5-15HP/5.5-11kW (Frame C)

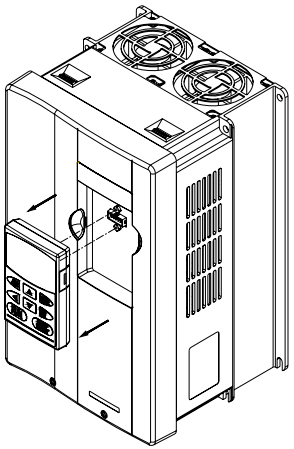

20-30HP/15-22kW (Frame D)

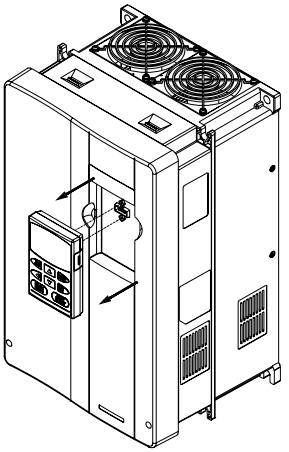

40-100HP/30-75kW (Frame E, E1)

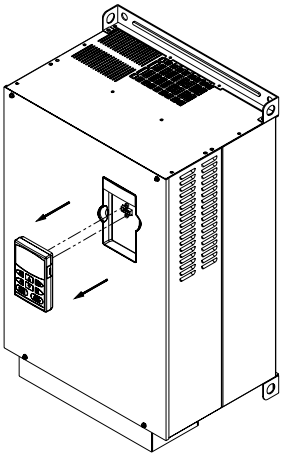

75-100HP/55-75kW (Frame F)

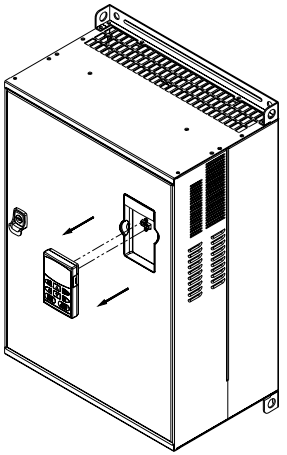

1.3.2 Remove Front Cover

1-3HP/0.75-2.2kW (Frame A, A1, A2)

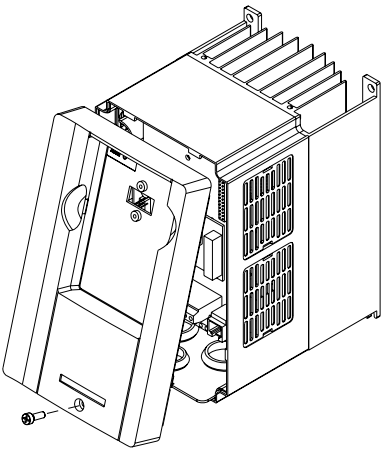

3-5HP/2.2-3.7kW (Frame B)

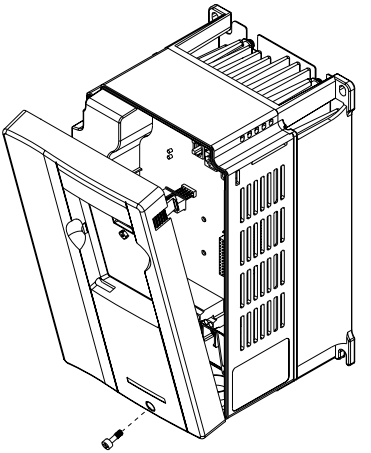

7.5-15HP/5.5-11kW (Frame C)

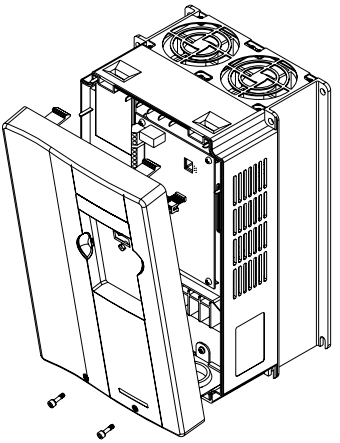

20-30HP/15-22kW (Frame D)

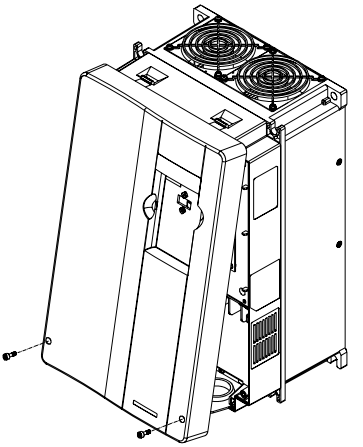

40-100HP/30-75kW (Frame E, E1)	75-100HP/55-75kW (Frame F)
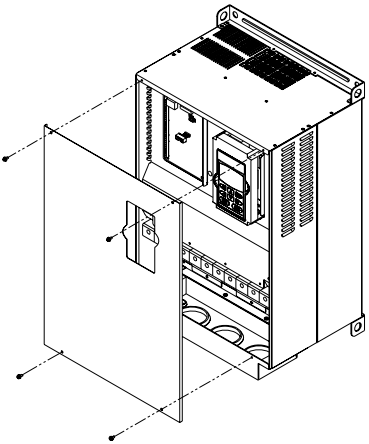	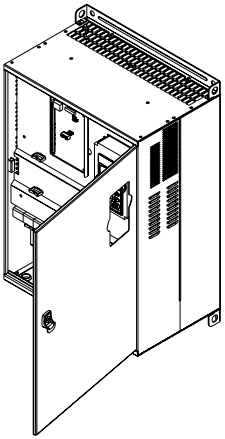

1.4 Lifting

Please carry only fully assembled AC motor drives as shown in the following.

For 40-100HP (Frame E, E1 and F)

Step 1	Step 2
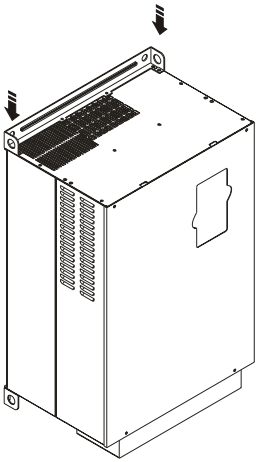	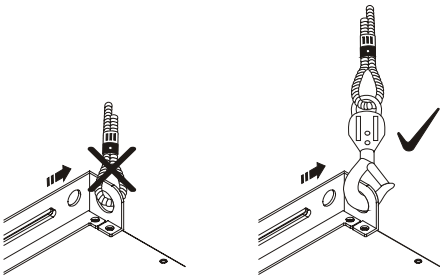

Step 3	Step 4
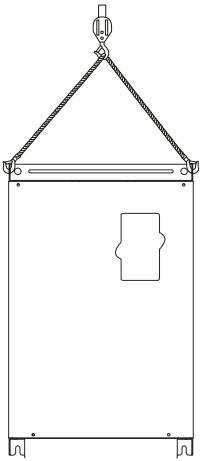	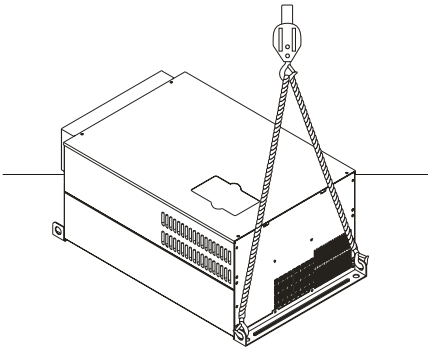

1.5 Storage

The AC motor drive should be kept in the shipping carton or crate before installation. In order to retain the warranty coverage, the AC motor drive should be stored properly when it is not to be used for an extended period of time. Storage conditions are:

Store in a clean and dry location free from direct sunlight or corrosive fumes.
Store within an ambient temperature range of -20 °C to +60 °C.
Store within a relative humidity range of 0% to 90% and non-condensing environment.
Store within an air pressure range of 86 kPA to 106kPA.

CAUTION!

1. DO NOT store in an area with rapid changes in temperature. It may cause condensation and frost.
2. DO NOT place on the ground directly. It should be stored properly. Moreover, if the surrounding environment is humid, you should put exsiccator in the package.
3. If the AC motor drive is stored for more than 3 months, the temperature should not be higher than 30 °C. Storage longer than one year is not recommended, it could result in the degradation of the electrolytic capacitors.
4. When the AC motor drive is not used for longer time after installation on building sites or places with humidity and dust, it's best to move the AC motor drive to an environment as stated above.

Chapter 2 Installation and Wiring

2.1 Ambient Conditions

Install the AC motor drive in an environment with the following conditions:

Operation	Air Temperature:	-10 ~ +40°C (14 ~ 104°F) for UL & cUL -10 ~ +50°C (14 ~ 122°F) without dust cover.
	Relative Humidity:	<90%, no condensation allowed
	Atmosphere pressure:	86 ~ 106 kPa
	Installation Site Altitude:	<1000m
	Vibration:	<20Hz: 9.80 m/s^2 (1G) max 20 ~ 50Hz: 5.88 m/s^2 (0.6G) max
Storage Transportation	Temperature:	-20°C ~ +60°C (-4°F ~ 140°F)
	Relative Humidity:	<90%, no condensation allowed
	Atmosphere pressure:	86 ~ 106 kPa
	Vibration:	<20Hz: 9.80 m/s^2 (1G) max 20 ~ 50Hz: 5.88 m/s^2 (0.6G) max
Pollution Degree	2: good for a factory type environment.	

CAUTION!

1. Operating, storing or transporting the AC motor drive outside these conditions may cause damage to the AC motor drive.
2. Failure to observe these precautions may void the warranty!

2.2 Installation

1. Mount the AC motor drive vertically on a flat vertical surface object by screws. Other directions are not allowed.
2. The AC motor drive will generate heat during operation. Allow sufficient space around the unit for heat dissipation.
3. The heat sink temperature may rise to 90°C when running. The material on which the AC motor drive is mounted must be noncombustible and be able to withstand this high temperature.
4. When AC motor drive is installed in a confined space (e.g. cabinet), the surrounding temperature must be within 10 ~ 40°C with good ventilation. DO NOT install the AC motor drive in a space with bad ventilation.

5. When installing multiple AC more drives in the same cabinet, they should be adjacent in a row with enough space in-between. When installing one AC motor drive below another one, use a metal separation between the AC motor drives to prevent mutual heating.
6. Prevent fiber particles, scraps of paper, saw dust, metal particles, etc. from adhering to the heatsink.

Minimum Mounting Clearances

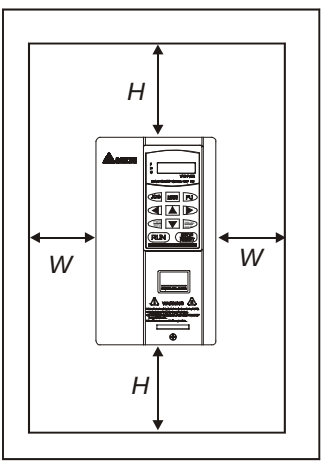

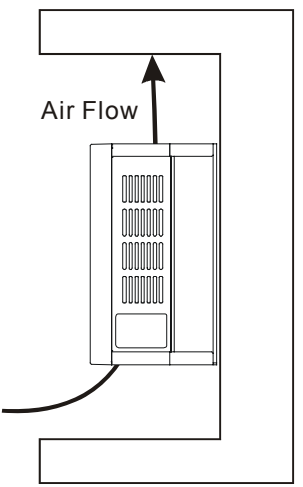

HP	W mm (inch)	H mm (inch)
1-5HP	50 (2)	150 (6)
7.5-20HP	75 (3)	175 (7)
25-75HP	75 (3)	200 (8)
100HP and above	75 (3)	250 (10)

2.3 Dimensions

(Dimensions are in millimeter and [inch])

Frame A: VFD007B23A/43A/53A

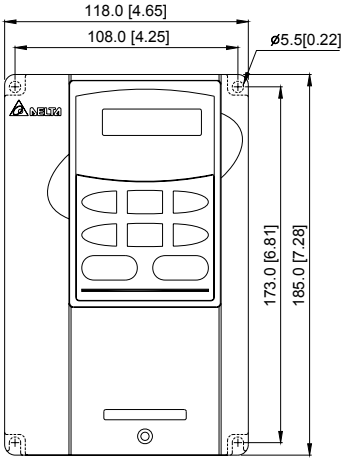

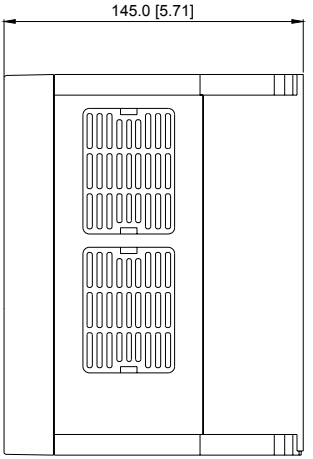

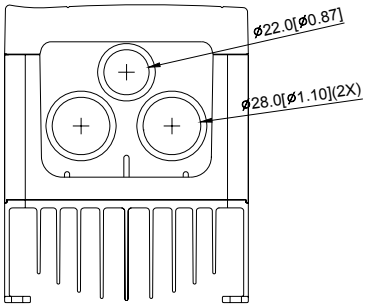

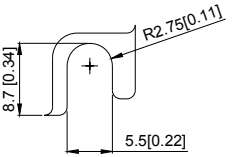

Frame A1: VFD007B21A, VFD015B21A/23A/43A/53A

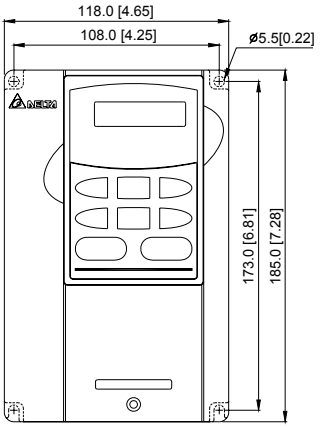

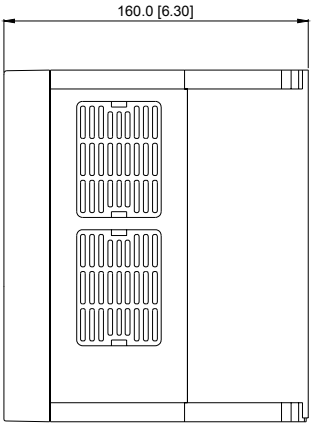

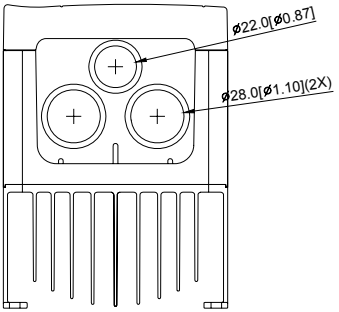

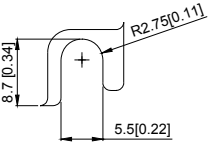

Frame A2: VFD015B21B/23B, VFD022B23B/43B/53A

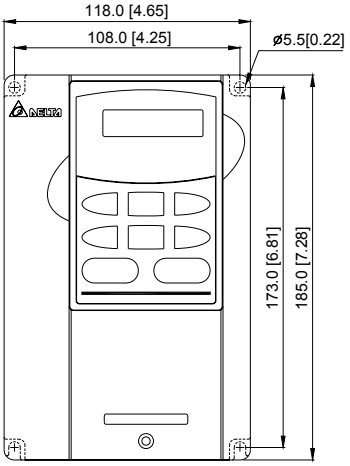

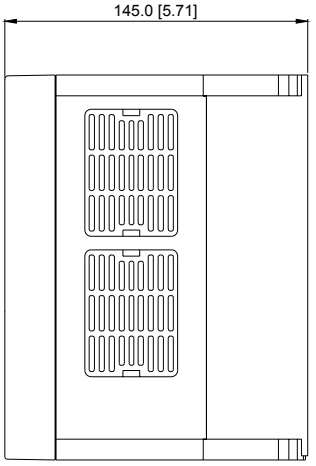

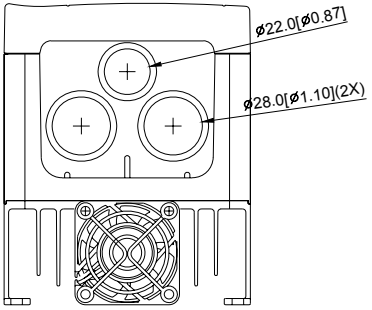

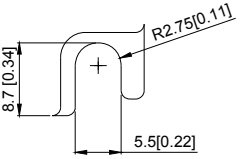

Frame B: VFD022B21A, VFD037B23A/43A/53A

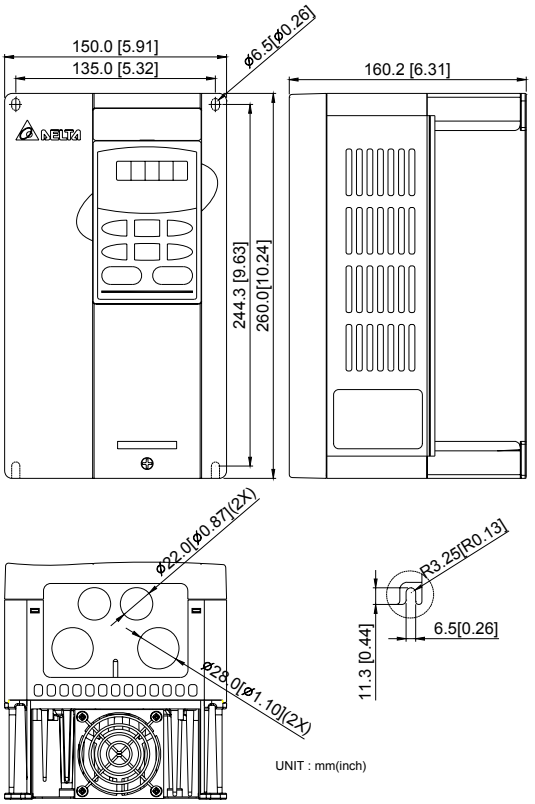

Frame C: VFD055B23A/43A/53A, VFD075B23A/43A/53A, VFD110B23A/43A/53A

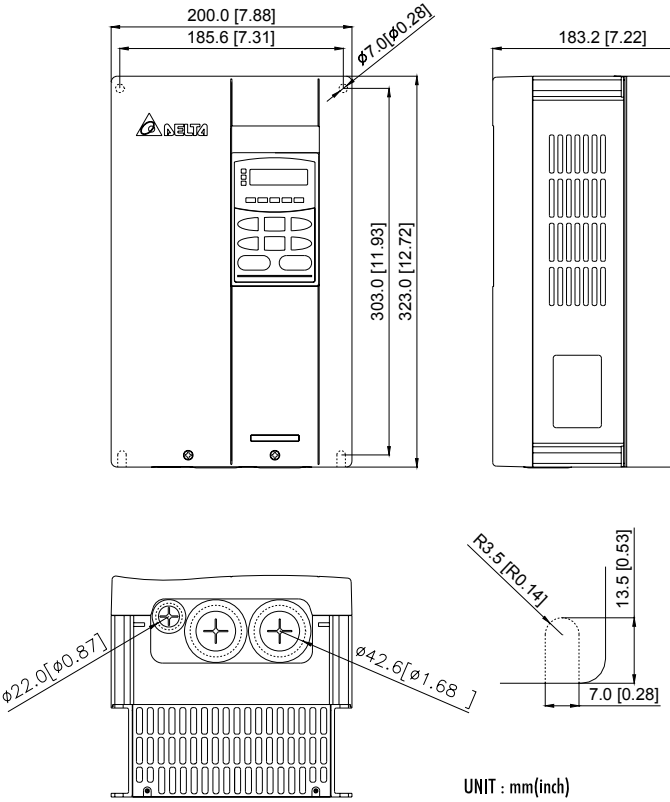

Frame D: VFD150B23A/43A/53A, VFD185B23A/43A/53A, VFD220B23A/43A/53A

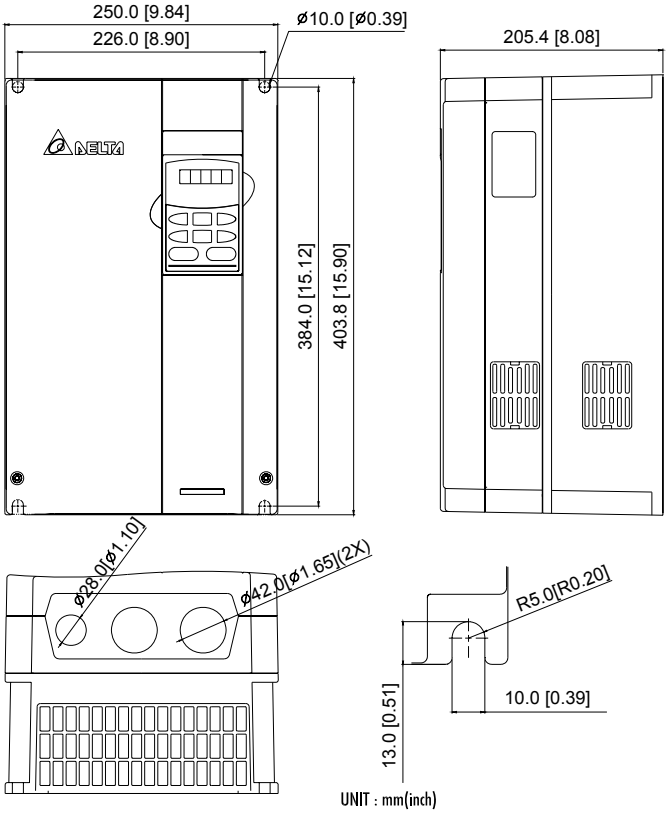

Frame E: VFD300B43A/53A, VFD370B43A/53A, VFD450B43A/53A

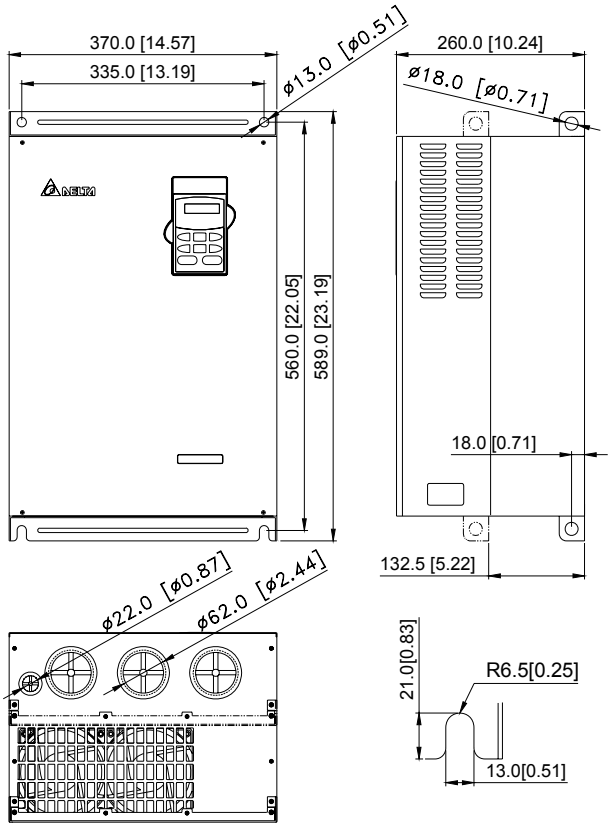

Frame E1: VFD300B23A, VFD370B23A, VFD550B43C/53A, VFD750B43C/53A

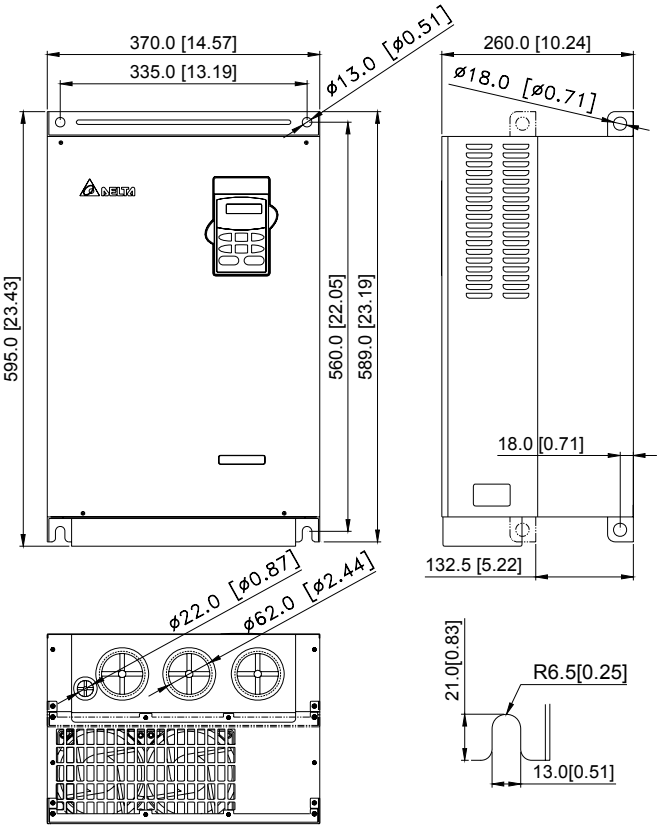

Frame F: VFD550B43A, VFD750B43A

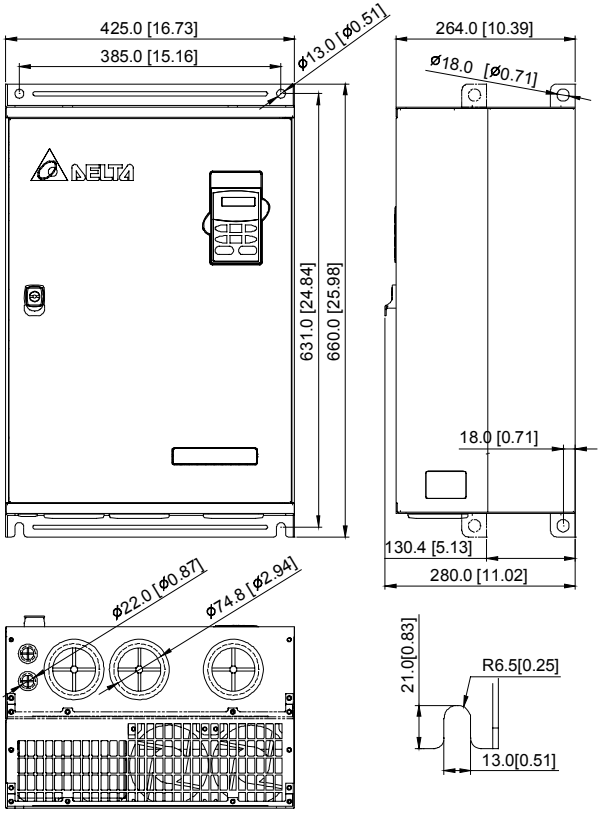

VFD-PU01

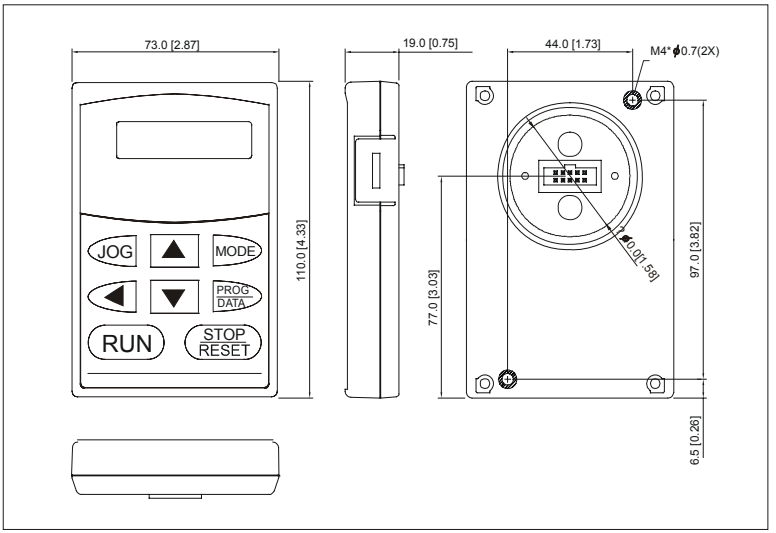

2.4 Wiring

After removing the front cover, check if the power and control terminals are clear. Be sure to observe the following precautions when wiring.

■ General Wiring Information

Applicable Codes

All VFD-B series are Underwriters Laboratories, Inc. (UL) and Canadian Underwriters Laboratories (cUL) listed, and therefore comply with the requirements of the National Electrical Code (NEC) and the Canadian Electrical Code (CEC).

Installation intended to meet the UL and cUL requirements must follow the instructions provided in “Wiring Notes” as a minimum standard. Follow all local codes that exceed UL and cUL requirements. Refer to the technical data label affixed to the AC motor drive and the motor nameplate for electrical data.

The "Line Fuse Specification" in Appendix B, lists the recommended fuse part number for each B-Series part number. These fuses (or equivalent) must be used on all installations where compliance with U.L. standards is a required.

2.4.1 Basic Wiring

- Make sure that power is only applied to the R/L1, S/L2, T/L3 terminals. Failure to comply may result in damage to the equipment. The voltage and current should lie within the range as indicated on the nameplate.
- Check following items after finishing the wiring:
  1. Are all connections correct?
  2. No loose wires?
  3. No short-circuits between terminals or to ground?

A charge may still remain in the DC bus capacitors with hazardous voltages even if the power has been turned off. To prevent personal injury, please ensure that the power is turned off and wait ten minutes for the capacitors to discharge to safe voltage levels before opening the AC motor drive.

DANGER!

1. All the units must be grounded directly to a common ground terminal to prevent electric shock, fire and interference.
2. Only qualified personnel familiar with AC motor drives is allowed to perform installation, wiring and commissioning.
3. Make sure that the power is off before doing any wiring to prevent electric shocks.

Basic Wiring Diagrams

Users must connect wires according to the circuit diagrams on the following pages. Do not plug a modem or telephone line to the RS-485 communication port or permanent damage may result. Terminals 1 & 2 are the power supply for the optional copy keypad PU06 only and should not be used for RS-485 communication.

Figure 1 for models of VFD-B Series

VFD007B21A/23A/43A/53A, VFD015B21A/21B/23A/23B/43A/53A, VFD022B23B/43B/53A

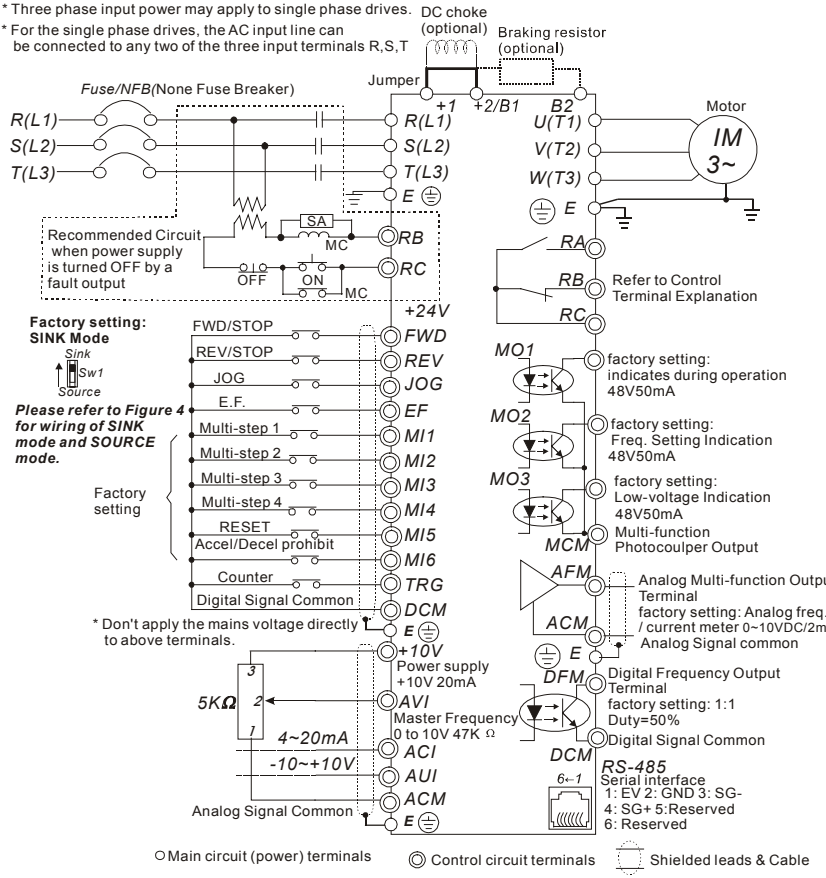

Figure 2 for models of VFD-B Series
VFD022B21A, VFD037B23A/43A/53A

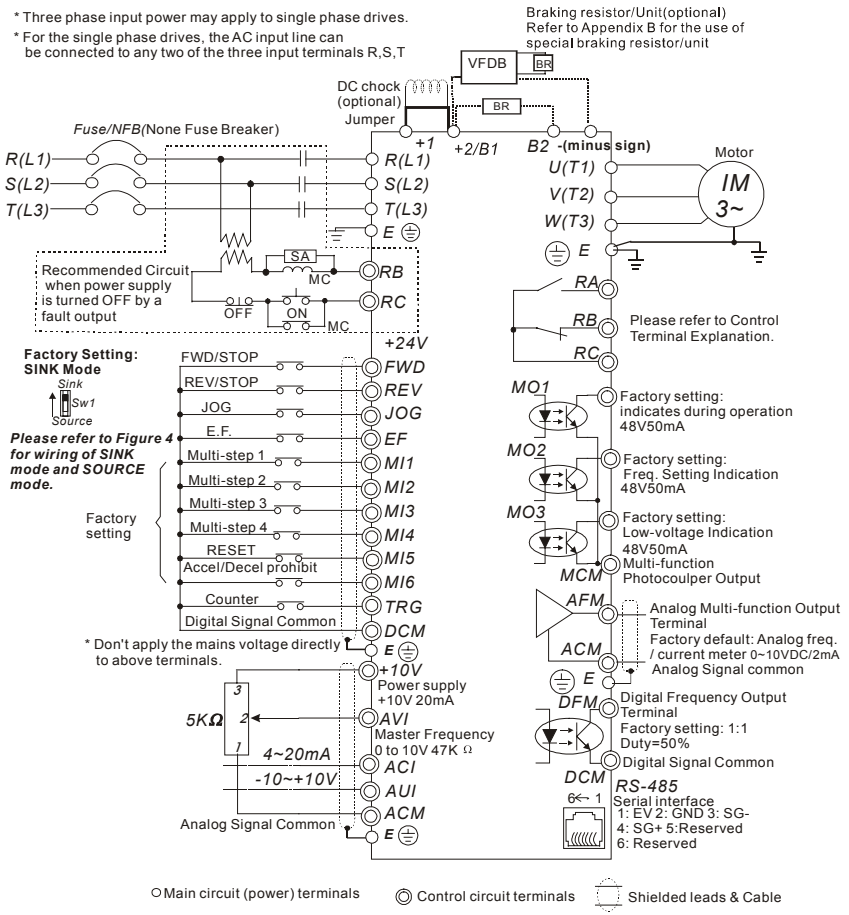

Figure 3 for models of VFD-B Series
VFD055B23A/43A/53A, VFD075B23A/43A/53A, VFD110B23A/43A/53A, VFD150B23A/43A/53A, VFD185B23A/43A/53A, VFD220B23A/43A/53A, VFD300B23A/43A/53A, VFD370B23A/43A/53A, VFD450B43A/53A, VFD550B43A/43C/53A, VFD750B43A/43C/53A

* Three phase input power may apply to single phase drives.
* For the single phase drives, the AC input line can be connected to any two of the three input terminals R,S,T

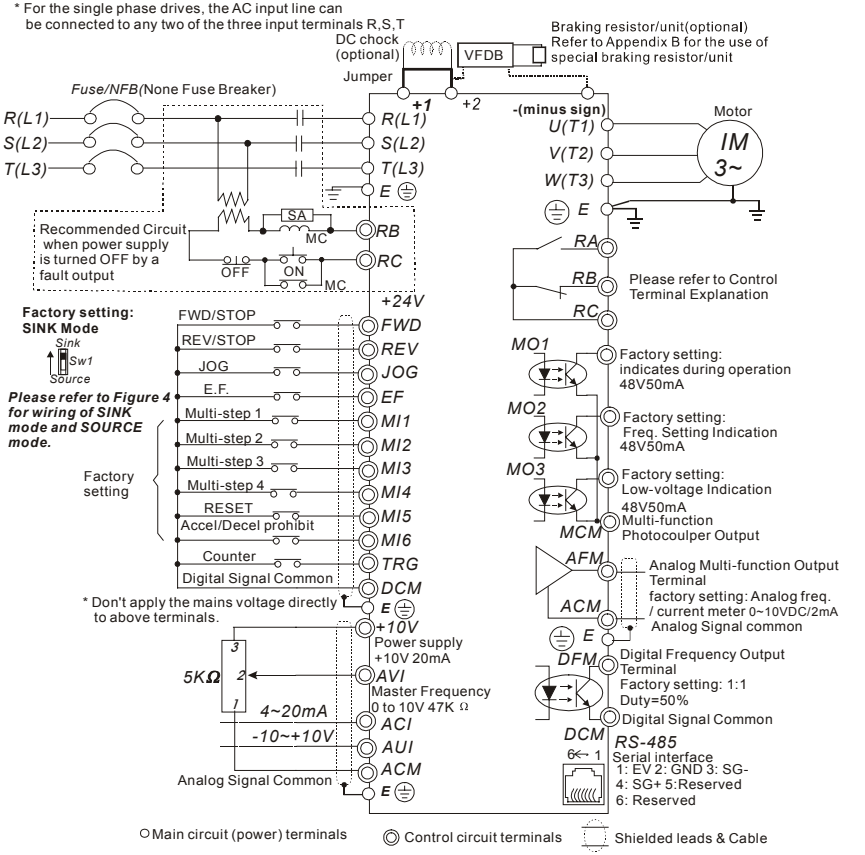

Figure 4 Wiring for SINK mode and SOURCE mode

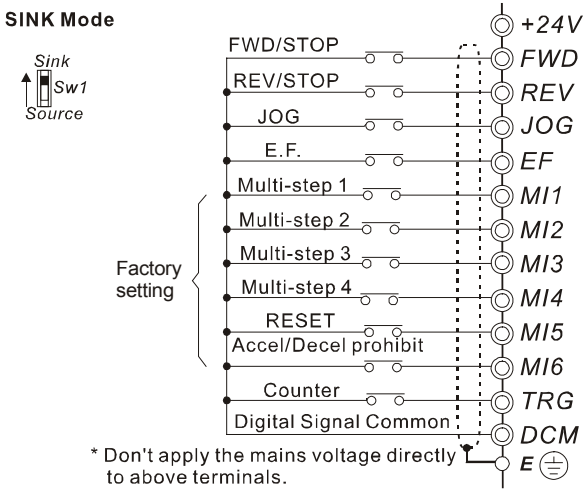

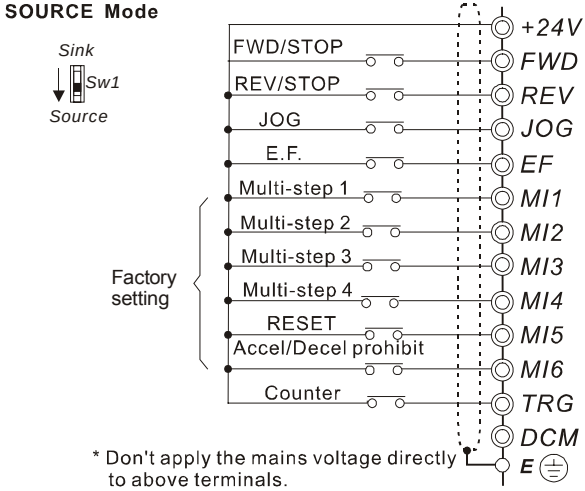

2.4.2 External Wiring

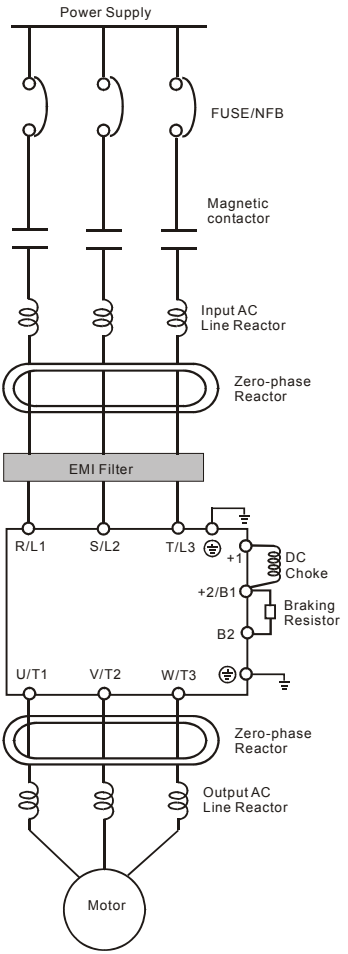

Items	Explanations
Power supply	Please follow the specific power supply requirements shown in Appendix A.
Fuse/NFB (Optional)	There may be an inrush current during power up. Please check the chart of Appendix B and select the correct fuse with rated current. Use of an NFB is optional.
Magnetic contactor (Optional)	Please do not use a Magnetic contactor as the I/O switch of the AC motor drive, as it will reduce the operating life cycle of the AC drive.
Input AC Line Reactor (Optional)	Used to improve the input power factor, to reduce harmonics and provide protection from AC line disturbances (surges, switching spikes, short interruptions, etc.). AC line reactor should be installed when the power supply capacity is 500kVA or more and exceeds 6 times the inverter capacity, or the mains wiring distance $\leq$ 10m.
Zero-phase Reactor (Ferrite Core Common Choke) (Optional)	Zero phase reactors are used to reduce radio noise especially when audio equipment is installed near the inverter. Effective for noise reduction on both the input and output sides. Attenuation quality is good for a wide range from AM band to 10MHz. Appendix B specifies the zero phase reactor. (RF220X00A)
EMI filter (Optional)	To reduce electromagnetic interference, please refer to Appendix B for more details.
Braking Resistor (Optional)	Used to reduce the deceleration time of the motor. Please refer to the chart in Appendix B for specific Braking Resistors.
Output AC Line Reactor (Optional)	Motor surge voltage amplitude depends on motor cable length. For applications with long motor cable (>20m), it is necessary to install a reactor at the inverter output side.

2.4.3 Main Terminals Connections

Terminal Symbol		Explanation of Terminal Function
R, S, T	R/L1, S/L2, T/L3	AC line input terminals (1-phase/3-phase)
U, V, W	U/T1, V/T2, W/T3	AC drive output terminals for connecting 3-phase induction motor
P1, P2	+1, +2	Connections for DC Choke (optional)
P-B, P2/B1~B2	+2/B1~B2	Connections for Braking Resistor (optional)
P2~N, P2/B1~N	+2~(-), +2/B1~(-)	Connections for External Braking Unit (VFDB series)
⏚		Earth connection, please comply with local regulations.

Mains power terminals (R/L1, S/L2, T/L3)

- Connect these terminals (R/L1, S/L2, T/L3) via a non-fuse breaker or earth leakage breaker to 3-phase AC power (some models to 1-phase AC power) for circuit protection. It is unnecessary to consider phase-sequence.
- It is recommended to add a magnetic contactor (MC) in the power input wiring to cut off power quickly and reduce malfunction when activating the protection function of AC motor drives. Both ends of the MC should have an R-C surge absorber.
- Do NOT run/stop AC motor drives by turning the power ON/OFF. Run/stop AC motor drives by RUN/STOP command via control terminals or keypad. If you still need to run/stop AC drives by turning power ON/OFF, it is recommended to do so only ONCE per hour.
- Do NOT connect 3-phase models to a 1-phase power source.

Control circuit terminals (U, V, W)

- When the AC drive output terminals U/T1, V/T2, and W/T3 are connected to the motor terminals U/T1, V/T2, and W/T3, respectively, the motor will rotate counterclockwise (as viewed on the shaft end of the motor) when a forward operation command is received. To permanently reverse the direction of motor rotation, switch over any of the two motor leads.

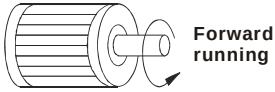

- DO NOT connect phase-compensation capacitors or surge absorbers at the output terminals of AC motor drives.
- With long motor cables, high capacitive switching current peaks can cause over-current, high leakage current or lower current readout accuracy. To prevent this, the motor cable should be less than 20m for 3.7kW models and below. And the cable should be less than 50m for 5.5kW models and above. For longer motor cables use an AC output reactor.
- Use well-insulated motor, suitable for inverter operation.

Terminals [+1, +2] for connecting DC reactor

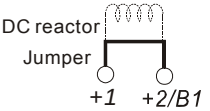

- To improve power factor and reduce harmonics connect a DC reactor between terminals [+1, +2]. Please remove the jumper before connecting the DC reactor.

NOTE Models of 15kW and above have a built-in DC reactor.

Terminals [+2/B1, B2] for connecting brake resistor and terminals [+1, +2/B1] for connecting external brake unit

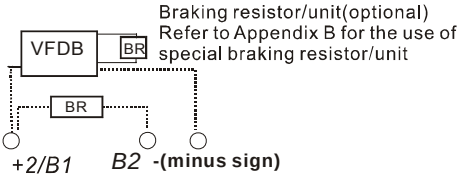

- Connect a brake resistor or brake unit in applications with frequent deceleration ramps, short deceleration time, too low braking torque or requiring increased braking torque.
- If the AC motor drive has a built-in brake chopper (all models of 11kW and below), connect the external brake resistor to the terminals [＋2/B1, B2].
- Models of 15kW and above don't have a built-in brake chopper. Please connect an external optional brake unit (VFDB-series) and brake resistor. Refer to VFDB series user manual for details.
- Connect the terminals [+(P), -(N)] of the brake unit to the AC motor drive terminals [+2(+2/B1), (-)]. The length of wiring should be less than 5m with twisted cable.
- When not used, please leave the terminals [+2/B1, -] open.

WARNING!

1. Short-circuiting [B2] or [-] to [+2/B1] can damage the AC motor drive.

Grounding terminals (⏚)

- Make sure that the leads are connected correctly and the AC drive is properly grounded. (Ground resistance should not exceed 0.1Ω.)
- Use ground leads that comply with local regulations and keep them as short as possible.
- Multiple VFD-B units can be installed in one location. All the units should be grounded directly to a common ground terminal, as shown in the figure below. **Ensure there are no ground loops.**

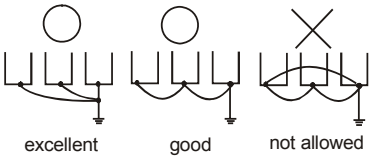

2.4.4 Control Terminals

Circuit diagram for digital inputs (SINK current 16mA.)

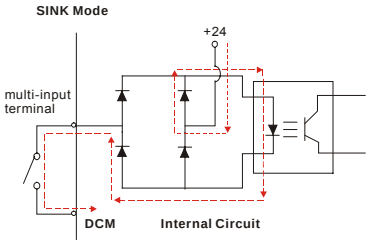

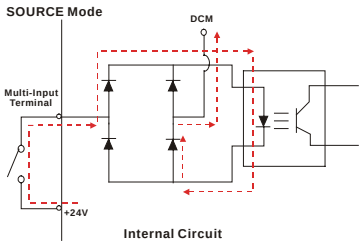

Terminal symbols and functions

Terminal Symbol	Terminal Function	Factory Settings (SINK) ON: Connect to DCM
FWD	Forward-Stop command	ON: Run in FWD direction OFF: Stop acc. to Stop Method
REV	Reverse-Stop command	ON: Run in REV direction OFF: Stop acc. to Stop Method
JOG	Jog command	ON: JOG operation OFF: Stop acc. to Stop Method

Terminal Symbol	Terminal Function	Factory Settings (SINK) ON: Connect to DCM
EF	External fault	ON: External Fault. Display “EF” and stop acc. To Stop Method. OFF: No fault
TRG	External counter input	ON: At every pulse counter is advanced by 1.
MI1	Multi-function Input 1	Refer to Pr.04-04 to Pr.04-09 for programming the Multi-function Inputs.
MI2	Multi-function Input 2	
MI3	Multi-function Input 3	
MI4	Multi-function Input 4	
MI5	Multi-function Input 5	
MI6	Multi-function Input 6	
DFM	Digital Frequency Meter (Open Collector Output) 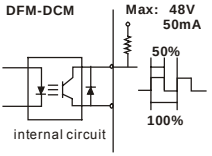 	Pulse voltage output monitor signal, proportional to output frequency Duty-cycle: 50% Ratio: Pr.03-07 Min. load: 10KΩ Max. current: 50mA Max. voltage: 48VDC.
+24V	DC Voltage Source	+24VDC, 20mA used for SOURCE mode.
DCM	Digital Signal Common	Common for digital inputs and used for SINK mode.
RA	Multi-function Relay output (N.O.) a	Resistive Load: 5A(N.O.)/3A(N.C.) 240VAC 5A(N.O.)/3A(N.C.) 24VDC Inductive Load: 1.5A(N.O.)/0.5A(N.C.) 240VAC 1.5A(N.O.)/0.5A(N.C.) 24VDC Refer to Pr.03-00 for programming
RB	Multi-function Relay output (N.C.) b	
RC	Multi-function Relay common	
MO1	Multi-function Output 1 (Photocoupler)	Maximum 48VDC, 50mA Refer to Pr.03-01 to Pr.03-03 for programming
MO2	Multi-function Output 2 (Photocoupler)	

Terminal Symbol	Terminal Function	Factory Settings (SINK) ON: Connect to DCM
MO3	Multi-function Output 3 (Photocoupler)	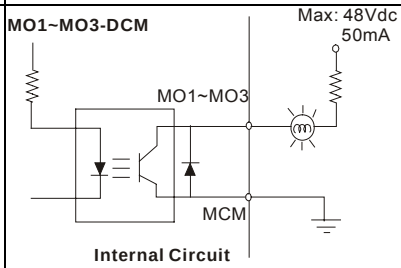
MCM	Multi-function output common	Common for Multi-function Outputs
+10V	Potentiometer power supply	+10VDC 20mA
AVI	Analog voltage Input 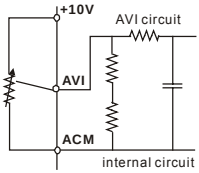	Impedance: 47kΩ Resolution: 10 bits Range: 0 ~ 10VDC = 0 ~ Max. Output Frequency (Pr.01-00) Selection: Pr.02-00, Pr.02-13, Pr.10-00 Set-up: Pr.04-00 ~ Pr.04-03
ACI	Analog current Input 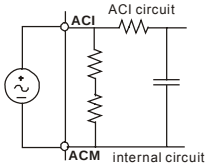	Impedance: 250Ω Resolution: 10 bits Range: 4 ~ 20mA = 0 ~ Max. Output Frequency (Pr.01-00) Selection: Pr.02-00, Pr.02-13, Pr.10-00 Set-up: Pr.04-11 ~ Pr.04-14
AUI	Auxiliary analog voltage input 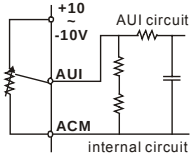	Impedance: 47kΩ Resolution: 10 bits Range: -10 ~ +10VDC = 0 ~ Max. Output Frequency (Pr.01-00) Selection: Pr.02-00, Pr.02-13, Pr.10-00 Set-up: Pr.04-15 ~ Pr.04-18

Terminal Symbol	Terminal Function	Factory Settings (SINK) ON: Connect to DCM
AFM	Analog output meter 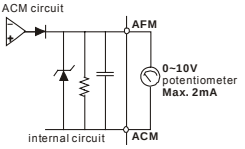 	0 to 10V, 2mA Impedance: 470Ω Output current 2mA max Resolution: 8 bits Range: 0 ~ 10VDC Function: Pr.03-05
ACM	Analog control signal (common)	Common for AVI, ACI, AUI, AFM

Control signal wiring size: 18 AWG (0.75 mm^2) with shielded wire.

Analog input terminals (AVI, ACI, AUI, ACM)

- Analog input signals are easily affected by external noise. Use shielded wiring and keep it as short as possible (<20m) with proper grounding. If the noise is inductive, connecting the shield to terminal ACM can bring improvement.
- If the analog input signals are affected by noise from the AC motor drive, please connect a capacitor and ferrite core as indicated in the following diagrams:

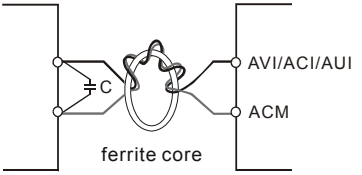

wind each wires 3 times or more around the core

Digital inputs (FWD, REV, JOG, EF, TRG, MI1~MI6, DCM)

- When using contacts or switches to control the digital inputs, please use high quality components to avoid contact bounce.

Digital outputs (MO1, MO2, MO3, MCM)

- Make sure to connect the digital outputs to the right polarity, see wiring diagrams.
- When connecting a relay to the digital outputs, connect a surge absorber or fly-back diode across the coil and check the polarity.

General

- Keep control wiring as far as possible from the power wiring and in separate conduits to avoid interference. If necessary let them cross only at 90º angle.
- The AC motor drive control wiring should be properly installed and not touch any live power wiring or terminals.

NOTE

- If a filter is required for reducing EMI (Electro Magnetic Interference), install it as close as possible to AC drive. EMI can also be reduced by lowering the Carrier Frequency.
- When using a GFCI (Ground Fault Circuit Interrupter), select a current sensor with sensitivity of 200mA, and not less than 0.1-second detection time to avoid nuisance tripping.

DANGER!

Damaged insulation of wiring may cause personal injury or damage to circuits/equipment if it comes in contact with high voltage.

2.4.5 Main Circuit Terminals

Frame A, A1, A2: VFD007B21A/23A/43A/53A, VFD015B21A/21B//23A/23B/43A/53A, VFD022B23B/43B/53A

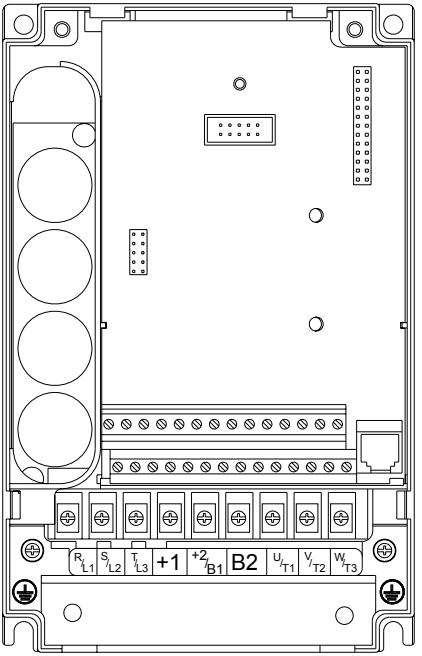

Control Terminal

Torque: 4Kgf-cm (3 in-lbf)

Wire: 12-24 AWG (3.3-0.2 mm^2)

Power Terminal

Torque: 18 kgf-cm (15.6 in-lbf)

Wire Gauge: 10-18 AWG (5.3-0.8 mm^2) stranded wire, 12-18 AWG (3.3-0.8 mm^2) solid wire

Wire Type: Copper only, 75°C

Frame B: VFD022B21A, VFD037B23A/43A/53A

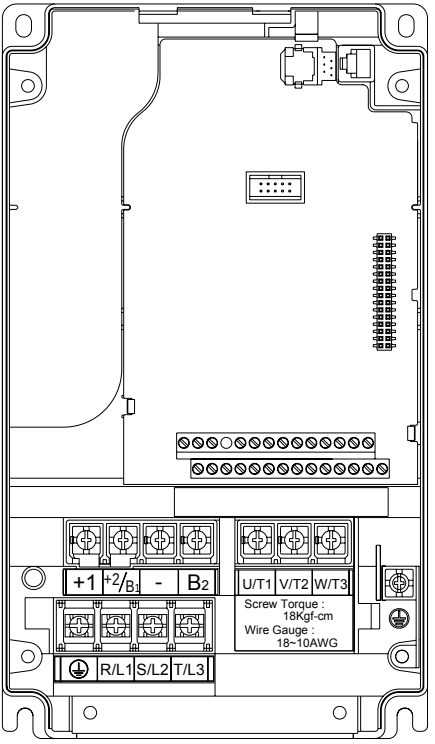

Control Terminal

Torque: 4Kgf-cm (3 in-lbf)

Wire: 12-24 AWG (3.3-0.2mm^2)

Power Terminal

Torque: 18 kgf-cm (15.6 in-lbf)

Wire Gauge: 10-18 AWG (5.3-0.8mm^2)

Wire Type: Stranded copper only, 75°C

Frame C: VFD055B23A/43A/53A, VFD075B23A/43A/53A, VFD110B23A/43A/53A

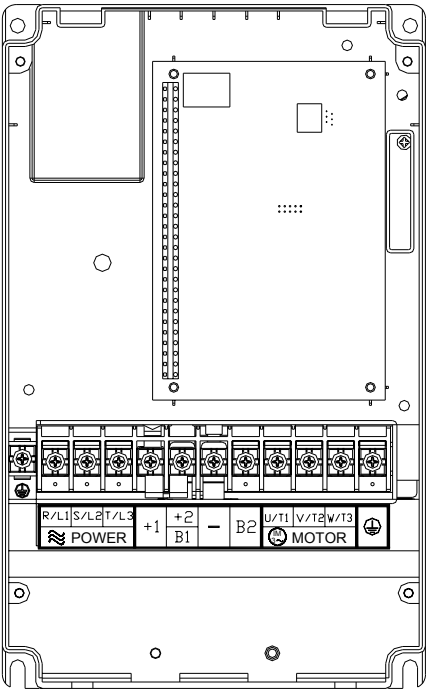

Control Terminal

Torque: 4Kgf-cm (3 in-lbf)

Wire: 12-24 AWG (3.3-0.2mm^2)

Power Terminal

Torque: 30Kgf-cm (26 in-lbf)

Wire: 8-12 AWG (8.4-3.3mm^2)

Wire Type: Stranded Copper only, 75°C

NOTE To connect 6 AWG (13.3 mm^2) wires, use Recognized Ring Terminals

Frame D: VFD150B23A/43A/53A, VFD185B23A/43A/53A, VFD220B23A/43A/53A

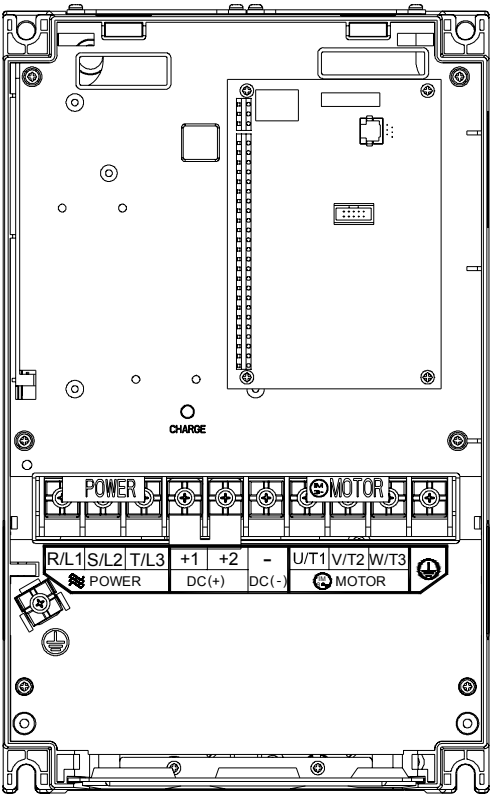

Control Terminal

Torque: 4Kgf-cm (3 in-lbf)

Wire: 12-24 AWG (3.3-0.2 mm^2)

Power Terminal

Torque: 30Kgf-cm (26 in-lbf)

Wire: 2-8 AWG (33.6-8.4 mm^2)

Wire Type: Stranded Copper only, 75°C

NOTE To connect 6 AWG (13.3 mm^2) wires, use Recognized Ring Terminals

Frame E1: VFD300B23A, VFD370B23A, VFD550B43C, VFD750B43C, VFD550B53A, VFD750B53A

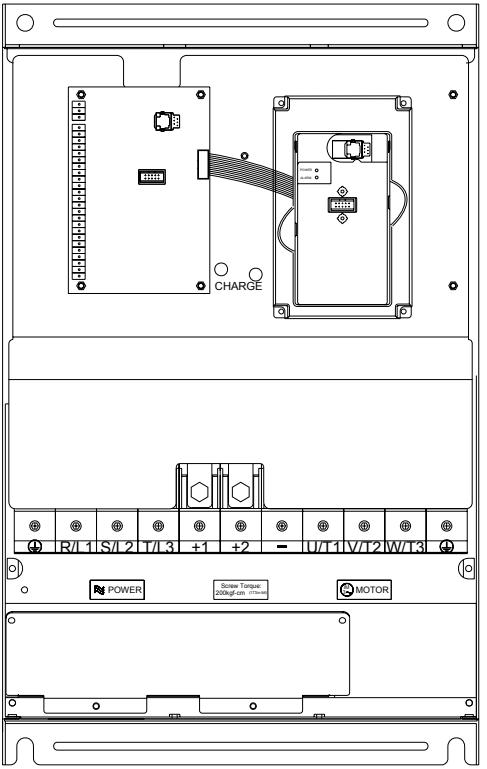

Control Terminal

Torque: 4Kgf-cm (3 in-lbf)

Wire: 12-24 AWG (3.3-0.2 mm^2)

Power Terminal

Torque: 200kgf-cm (173 in-lbf)

Wire Gauge: 1/0 - 3/0 AWG (67.4-85 mm^2)

Wire Type: Stranded copper only, 75°C

Frame E: VFD300B43A, VFD370B43A, VFD450B43A, VFD300B53A, VFD370B53A, VFD450B53A

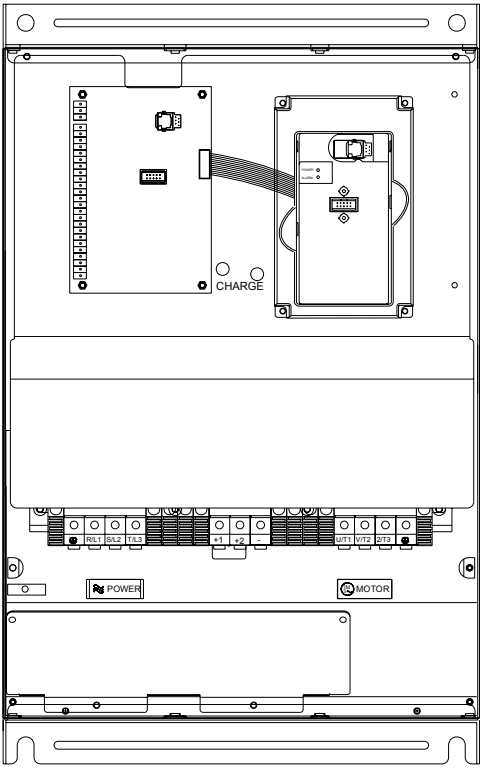

Control Terminal

Torque: 4Kgf-cm (3 in-lbf)

Wire: 12-24 AWG (3.3-0.2 mm^2)

Power Terminal

Torque: 58.7kgf-cm (50.9 in-lbf) max.

Wire Gauge: 2-6AWG (33.6-13.3 mm^2)

Wire Type: Stranded copper only, 75°C

Frame F: VFD550B43A, VFD750B43A

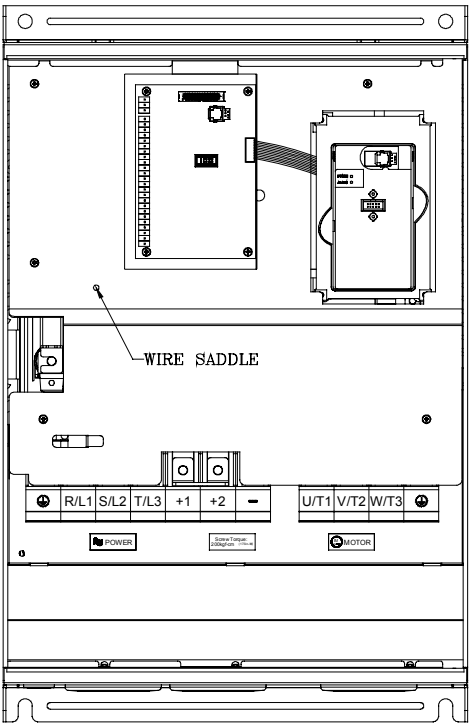

Control Terminal

Torque: 4Kgf-cm (3 in-lbf)

Wire: 12-24 AWG (3.3-0.2 mm^2)

Power Terminal

Torque: 200 kgf-cm (173 in-lbf)

Wire: VFD550B43A : 2/0 AWG (67.4 mm^2)

VFD750B43A: 3/0 AWG (85 mm^2)

Wire Type: Stranded copper only, 75°C

Chapter 3 Start Up

3.1 Preparations before Start-up

Carefully check the following items before proceeding.

- Make sure that the wiring is correct. In particular, check that the output terminals U, V, W. are NOT connected to power and that the drive is well grounded.
- Verify that there are no short-circuits between terminals and from terminals to ground or mains power.
- Check for loose terminals, connectors or screws.
- Verify that no other equipment is connected to the AC motor
- Make sure that all switches are OFF before applying power to ensure that the AC motor drive doesn't start running and there is no abnormal operation after applying power.
- Make sure that the front cover is well installed before applying power.
- Do NOT operate the AC motor drive with humid hands.
- Check following items after applying power:

  - The keypad should light up as follows (normal status with no error)

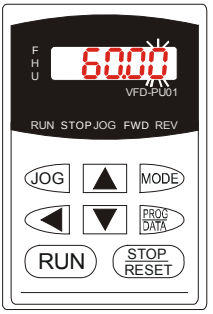

When power is ON, LEDs "F", "STOP" and "FWD" should light up. The display will show "60.00" with the least signification "0" flashing.

- If the drive has built-in fan (2.2kW and above) it should run. The factory setting of Fan Control Pr.03-12=00 (Fan always on).

3.2 Operation Method

Refer to 4.2 How to operate the digital keypad VFD-PU01 and chapter 5 parameters for setting. Please choose a suitable method depending on application and operation rule. The operation is usually used as shown in the following table.

Operation Method	Frequency Source	Operation Command Source
PU01 keypad	▲ ▼	RUN STOP RESET
Operate from external signal	MI1 MI2 DCM Parameter setting: 04-04=11 04-05=12	External terminals input: FWD-DCM REV-DCM
	AVI, ACI, AUI	

3.3 Trial Run

After finishing checking the items in “3.1 preparation before start-up”, you can perform a trial run. The factory setting of operation source is from keypad (Pr.02-01=00).

1. After applying power, verify that LED “F” is on and the display shows 60.00Hz.
2. Setting frequency to about 5Hz by using ▼ key.
3. Pressing RUN key for forward running. And if you want to change to reverse running, you should press ▼ key in -Frd- page. And if you want to decelerate to stop, please press STOP RESET key.
4. Check following items:
   - *Check if the motor direction of rotation is correct.*
   - *Check if the motor runs steadily without abnormal noise and vibration.*
   - *Check if acceleration and deceleration are smooth.*

If the results of trial run are normal, please start formal run.

NOTE

1. Please stop running immediately if any fault occurs and refer to troubleshooting for solving the problem.
2. Please do NOT touch output terminals U, V, W when power is still applied to L1/R, L2/S, L3/T even when the AC motor drive has stopped. The DC-link capacitors may still be charged to hazardous voltage levels, even if the power has been turned off.
3. To avoid damage to components, do not touch them or the circuit boards with metal objects or your bare hands.

This page intentionally left blank.

Chapter 4 Digital Keypad Operation

4.1 Description of the Digital Keypad VFD-PU01

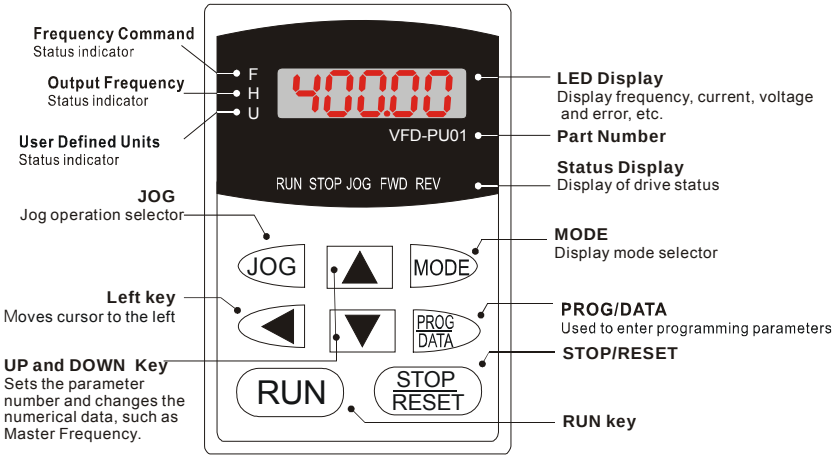

Display Message	Descriptions
F 60.00	Displays the AC drive Master Frequency.
H 50.00	Displays the actual output frequency present at terminals U/T1, V/T2, and W/T3.
U 1800.0	User defined unit (where U = F x Pr.00-05)
A 5.0	Displays the output current present at terminals U/T1, V/T2, and W/T3.
-Frd-	Displays the AC motor drive forward run status.

Display Message	Descriptions
-rEv-	Displays the AC motor drive reverse run status.
c 20	The counter value (C).
06-00	Displays the selected parameter.
10	Displays the actual stored value of the selected parameter.
EF	External Fault.
-End-	Display “End” for approximately 1 second if input has been accepted by pressing PROG DATA key. After a parameter value has been set, the new value is automatically stored in memory. To modify an entry, use the ▲, ▼ and ◀ keys.
-Err-	Display “Err”, if the input is invalid.

4.2 How to Operate the Digital Keypad VFD-PU01

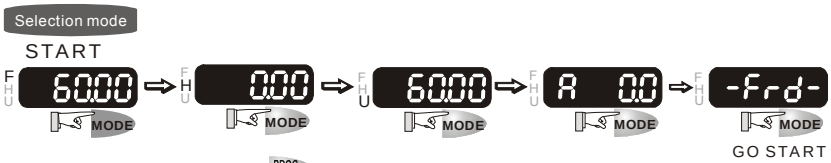

NOTE: In the selection mode, press PROG DATA to set the parameters.

NOTE: In the parameter setting mode, you can press MODE to return to the selection mode.

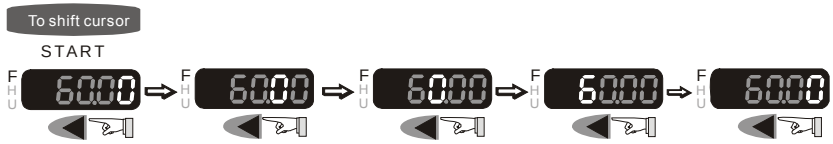

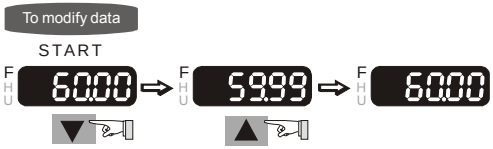

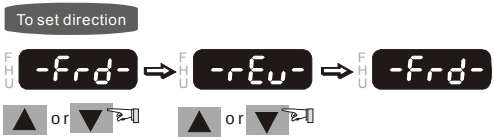

This page intentionally left blank.

Chapter 5 Parameters

The VFD-B parameters are divided into 12 groups by property for easy setting. In most applications, the user can finish all parameter settings before start-up without the need for re-adjustment during operation.

The 12 groups are as follows:

Group 0: User Parameters
Group 1: Basic Parameters
Group 2: Operation Method Parameters
Group 3: Output Function Parameters
Group 4: Input Function Parameters
Group 5: Multi-Step Speed and PLC Parameters
Group 6: Protection Parameters
Group 7: Motor Parameters
Group 8: Special Parameters
Group 9: Communication Parameters
Group 10: PID Control Parameters
Group 11: Fan & Pump Control Parameters

5.1 Summary of Parameter Settings

✓: The parameter can be set during operation.

Group 0 User Parameters

Parameter	Explanation	Settings	Factory Setting	Customer
00-00	Identity Code of the AC motor drive	Read-only	##	
00-01	Rated Current Display of the AC motor drive	Read-only	#.#	
00-02	Parameter Reset	08: Keypad lock 09: All parameters are reset to factory settings (50Hz, 220V/380V/575V) 10: All parameters are reset to factory settings (60Hz, 220V/440V/575V)	00	
✓00-03	Start-up Display Selection	00: Display the frequency command value (LED F) 01: Display the actual output frequency (LED H) 02: Display the content of user-defined unit (LED U) 03: Multifunction display, see Pr.00-04 04: FWD/REV command	00	
✓00-04	Content of Multi Function Display	00: Display output current (A) 01: Display counter value (C) 02: Display process operation (1.tt) 03: Display DC-BUS voltage ($\overline{u}$) 04: Display output voltage (E) 05: Output power factor angle (n) 06: Display output power (P) 07: Display actual motor speed (HU) 08: Display the estimated value of torque as it relates to current (t) 09: Display PG numbers/10ms (G) 10: Display analog feedback signal value (b)(%) 11: Display AVI (U1.) (%) 12: Display ACI (U2.) (%) 13: Display AUI (U3.) (%) 14: Display the temperature of heat sink (°C)	00	
✓00-05	User-Defined Coefficient K	0.01 to 160.00	1.00	
00-06	Software Version	Read-only	#.##	
00-07	Password Input	00 to 65535	00	
00-08	Password Set	00 to 65535	00	
00-09	Control Method	00: V/f Control 01: V/f + PG Control 02: Vector Control 03: Vector + PG Control	00	

Parameter	Explanation	Settings	Factory Setting	Customer
00-10	Reserved			

Group 1 Basic Parameters

Parameter	Explanation	Settings	Factory Setting	Customer
01-00	Maximum Output Frequency (Fmax)	50.00 to 400.00 Hz	60.00	
01-01	Maximum Voltage Frequency (Fbase)	0.10 to 400.00 Hz	60.00	
01-02	Maximum Output Voltage (Vmax)	230V series: 0.1V to 255.0V 460V series: 0.1V to 510.0V 575V series: 0.1V to 637.0V	220.0 440.0 575.0	
01-03	Mid-Point Frequency (Fmid)	0.10 to 400.00 Hz	0.50	
01-04	Mid-Point Voltage (Vmid)	230V series: 0.1V to 255.0V 460V series: 0.1V to 510.0V 575V series: 0.1V to 637.0V	1.7 3.4 4.8	
01-05	Minimum Output Frequency (Fmin)	0.10 to 400.00 Hz	0.50	
01-06	Minimum Output Voltage (Vmin)	230V series: 0.1V to 255.0V 460V series: 0.1V to 510.0V 575V series: 0.1V to 637.0V	1.7 3.4 4.8	
01-07	Output Frequency Upper Limit	1 to 120%	100	
01-08	Output Frequency Lower Limit	0 to100 %	0	
✓01-09	Accel Time 1	0.01 to 3600.0 sec	10.0	
✓01-10	Decel Time 1	0.01 to 3600.0 sec	10.0	
✓01-11	Accel Time 2	0.01 to 3600.0 sec	10.0	
✓01-12	Decel Time 2	0.01 to 3600.0 sec	10.0	
01-09 ~ 01-12: Factory setting for models of 30hp (22kW) and above is 60sec.				
✓01-13	Jog Acceleration Time	0.1 to 3600.0 sec	1.0	
✓01-14	Jog Frequency	0.10 Hz to 400.00 Hz	6.00	
✓01-15	Auto acceleration / deceleration (refer to Accel/Decel time setting)	00: Linear Accel/Decel 01: Auto Accel, Linear Decel 02: Linear Accel, Auto Decel 03: Auto Accel/Decel (Set by load) 04: Auto Accel/Decel (set by Accel/Decel Time setting)	00	
01-16	Acceleration S-Curve	00 to 07	00	
01-17	Deceleration S-Curve	00 to 07	00	
✓01-18	Accel Time 3	0.01 to 3600.0 sec	10.0	
✓01-19	Decel Time 3	0.01 to 3600.0 sec	10.0	
✓01-20	Accel Time 4	0.01 to 3600.0 sec	10.0	

Parameter	Explanation	Settings	Factory Setting	Customer
✓01-21	Decel Time 4	0.01 to 3600.0 sec	10.0	
01-18 ~ 01-21: Factory setting for models of 30hp (22kW) and above is 60sec.				
✓01-22	Jog Deceleration Time	0.1 to 3600.0 sec	1.0	
01-23	Accel/Decel Time Unit	00: Unit: 1 sec 01: Unit: 0.1 sec 02: Unit: 0.01 sec	01	

Group 2 Operation Method Parameters

Parameter	Explanation	Settings	Factory Setting	Customer
✓02-00	Source of First Master Frequency Command	00: Digital keypad (PU01) UP/DOWN keys or Multi-function Inputs UP/DOWN. Last used frequency saved. 01: 0 to +10V from AVI 02: 4 to 20mA from ACI 03: -10 to +10Vdc from AUI 04: RS-485 serial communication (RJ-11). Last used frequency saved. 05: RS-485 serial communication (RJ-11). Last used frequency not saved. 06: Combined use of master and auxiliary frequency command (See Pr. 02-10 to 02-12)	00	
✓02-01	Source of First Operation Command	00: Digital keypad (PU01) 01: External terminals. Keypad STOP/RESET enabled. 02: External terminals. Keypad STOP/RESET disabled. 03: RS-485 serial communication (RJ-11). Keypad STOP/RESET enabled. 04: RS-485 serial communication (RJ-11). Keypad STOP/RESET disabled.	00	
02-02	Stop Method	00: STOP: ramp to stop; E.F.: coast to stop 01: STOP: coast to stop; E.F.: coast to stop 02: STOP: ramp to stop; E.F.: ramp to stop 03: STOP: coast to stop; E.F.: ramp to stop	00	
02-03	PWM Carrier Frequency Selections	**230V&460V:**1-5hp/0.75-3.7kW: 1-15kHz 7.5-25hp/5.5-18.5kW: 01-15kHz 30-60hp/22-45kW: 01-09kHz 75-100hp/55-75kW: 01-06kHz **575V:** 1-15hp/0.75-11kW: 01-10 kHz 20-60hp/15-45kW: 01-08 kHz 75-100hp/55-75kW: 01-06kHz	15 09 06 06 06 06 06	

Parameter	Explanation	Settings	Factory Setting	Customer
02-04	Motor Direction Control	00: Enable forward/reverse operation 01: Disable reverse operation 02: Disabled forward operation	00	
02-05	2-wire/3-wire Operation Control Modes	00: 2-wire: FWD/STOP, REV/STOP 01: 2-wire: FWD/REV, RUN/STOP 02: 3-wire operation	00	
02-06	Line Start Lockout	00: Disable. Operation status is not changed even if operation command source Pr.02-01 and/or Pr.02-14 is changed. 01: Enable. Operation status is not changed even if operation command source Pr.02-01 and/or Pr.02-14 is changed. 02: Disable. Operation status will change if operation command source Pr.02-01 and/or Pr.02-14 is changed. 03: Enable. Operation status will change if operation command source Pr.02-01 and/or Pr.02-14 is changed.	00	
02-07	Loss of ACI Signal (4-20mA)	00: Decelerate to 0 Hz 01: Coast to stop and display “EF” 02: Continue operation by last frequency command	00	
✓02-08	Up/Down Mode	00: Based on accel/decel time 01: Constant speed 02: Based on accel/decel time, but frequency command will be 0 when stopped.	00	
✓02-09	Accel/Decel Rate of Change of UP/DOWN Operation with Constant Speed	0.01~1.00 Hz/msec	0.01	
✓02-10	Source of the Master Frequency Command	00: Digital keypad (PU01) UP/DOWN keys or Multi-function Inputs UP/DOWN. Last used frequency saved. 01: 0 to +10V from AVI 02: 4 to 20mA from ACI 03: -10 to +10Vdc from AUI 04: RS-485 serial communication (RJ-11). Last used frequency saved.	00	
✓02-11	Source of the Auxiliary Frequency Command	00: Digital keypad (PU01) UP/DOWN keys or Multi-function Inputs UP/DOWN. Last used frequency saved. 01: 0 to +10V from AVI 02: 4 to 20mA from ACI 03: -10 to +10Vdc from AUI 04: RS-485 serial communication (RJ-11). Last used frequency saved.	00	
✓02-12	Combination of the Master and Auxiliary Frequency Command	00: Master frequency + auxiliary frequency 01: Master frequency - auxiliary frequency	00	

Parameter	Explanation	Settings	Factory Setting	Customer
✓02-13	Source of Second Frequency Command	00: Digital keypad (PU01) UP/DOWN keys or Multi-function Inputs UP/DOWN. Last used frequency saved. 01: 0 to +10V from AVI 02: 4 to 20mA from ACI 03: -10 to +10Vdc from AUI 04: RS-485 serial communication (RJ-11). Last used frequency saved 05: RS-485 serial communication (RJ-11). Last used frequency not saved. 06: Combined use of master and auxiliary frequency command (See Pr. 02-10 to 02-12)	00	
✓02-14	Source of Second Operation Command	00: Digital keypad (PU01) 01: External terminals. Keypad STOP/RESET enabled. 02: External terminals. Keypad STOP/RESET disabled. 03: RS-485 serial communication (RJ-11). Keypad STOP/RESET enabled. 04: RS-485 serial communication (RJ-11). Keypad STOP/RESET disabled.	00	
✓02-15	Keyboard Frequency Command	0.00 ~ 400.00Hz	60.00	

Group 3 Output Function Parameters

Parameter	Explanation	Settings	Factory Setting	Customer
03-00	Multi-Function Output Relay (RA1, RB1, RC1)	00: No function 01: AC drive operational 02: Master frequency attained 03: Zero speed 04: Over torque detection 05: Base-Block (B.B.) indication 06: Low-voltage indication 07: Operation mode indication 08: Fault indication 09: Desired frequency attained 1 10: PLC program running 11: PLC program step completed 12: PLC program completed 13: PLC program operation paused 14: Terminal count value attained 15: Preliminary count value attained 16: Auxiliary motor No.1 17: Auxiliary motor No.2	08	
03-01	Multi-Function Output Terminal MO1		01	
03-02	Multi-Function Output Terminal MO2		02	
03-03	Multi-Function Output Terminal MO3		20	

Parameter	Explanation	Settings	Factory Setting	Customer
		18: Auxiliary motor No.3 19: Heat sink overheat warning 20: AC motor drive ready 21: Emergency stop indication 22: Desired frequency attained 2 23: Software braking signal 24: Zero speed output signal 25: Under-current detection 26: Operation indication (H>=Fmin) 27: Feedback signal error 28: User-defined low-voltage detection 29: Brake control (Desired frequency attained 3)		
03-04	Desired Frequency Attained 1	0.00 to 400.00 Hz	0.00	
03-05	Analog Output Signal	00: Analog frequency meter 01: Analog current meter 02: Output voltage 03: Output frequency command 04: Output motor speed 05: Load power factor (cos90° to Cos0°)	00	
✓03-06	Analog Output Gain	01 to 200%	100	
✓03-07	Digital Output Multiplying Factor	01 to 20	01	
✓03-08	Terminal Count Value	00 to 65500	00	
✓03-09	Preliminary Count Value	00 to 65500	00	
03-10	Desired Frequency Attained 2	0.00 to 400.00 Hz	0.00	
03-11	EF Active When Preliminary Count Value Attained	00: Preliminary count value attained, no EF display 01: Preliminary count value attained, EF active	00	
03-12	Fan Control	00: Fan always ON 01: 1 minute after AC motor drive stops, fan will be OFF 02: AC motor drive runs and fan ON, AC motor drive stops and fan OFF 03: Fan ON to run when preliminary heatsink temperature attained	00	
03-13	Brake Release Frequency	0.00 to 400.00Hz	0.00	
03-14	Brake Engage Frequency	0.00 to 400.00Hz	0.00	

Group 4 Input Function Parameters

Parameter	Explanation	Settings	Factory Setting	Customer
✓04-00	AVI Analog Input Bias	0.00~200.00 %	0.00	
04-01	AVI Bias Polarity	00: Positive bias 01: Negative bias	00	
✓04-02	AVI Input Gain	1 to 200 %	100	
04-03	AVI Negative Bias, Reverse Motion Enable/Disable	00: No AVI negative bias command 01: Negative bias: REV motion enabled 02: Negative bias: REV motion disabled	00	
04-04	Multi-Function Input Terminal 1 (MI1)	00: No function 01: Multi-Step speed command 1 02: Multi-Step speed command 2 03: Multi-Step speed command 3 04: Multi-Step speed command 4 05: External reset (N.O.) 06: Accel/Decel inhibit 07: Accel/Decel time selection command 1 08: Accel/Decel time selection command 2 09: External base block (N.O.) 10: External base block (N.C.) 11: Up: Increment master frequency 12: Down: Decrement master frequency 13: Counter reset 14: Run PLC program 15: Pause PLC program 16: Auxiliary motor No.1 output disable 17: Auxiliary motor No.2 output disable 18: Auxiliary motor No.3 output disable 19: Emergency stop (N.O.) 20: Emergency stop (N.C.) 21: Master frequency selection AVI/ACI 22: Master frequency selection AVI/AUI 23: Operation command selection (keypad/external terminals) 24: Auto accel/decel mode disable 25: Forced stop (N.C.) 26: Forced stop (N.O.) 27: Parameter lock enable (N.O.) 28: PID function disabled 29: Jog FWD/REV command 30: External reset (N.C.)	01	
04-05	Multi-Function Input Terminal 2 (MI2)		02	
04-06	Multi-Function Input Terminal 3 (MI3)		03	
04-07	Multi-Function Input Terminal 4 (MI4)		04	
04-08	Multi-Function Input Terminal 5 (MI5)		05	
04-09	Multi-Function Input Terminal 6 (MI6)		06	

Parameter	Explanation	Settings	Factory Setting	Customer
		31: Source of second frequency command enabled 32: Source of second operation command enabled 33: One shot PLC 34: Proximity sensor input for simple Index function 35: Output shutoff stop (NO) 36: Output shutoff stop (NC)		
04-10	Digital Terminal Input Debouncing Time	1 to 20 (*2ms)	01	
✓04-11	ACI Analog Input Bias	0.00~200.00 %	0.00	
04-12	ACI Bias Polarity	00: Positive bias 01: Negative bias	00	
✓04-13	ACI Input Gain	01 to 200 %	100	
04-14	ACI Negative Bias, Reverse Motion Enable/Disable	00: No ACI negative bias command 01: Negative bias: REV motion enabled 02: Negative bias: REV motion disabled	00	
✓04-15	AUI Analog Input Bias	0.00~200.00 %	0.00	
04-16	AUI Bias Polarity	00: Positive bias 01: Negative bias	00	
✓04-17	AUI Input Gain	01 to 200 %	100	
04-18	AUI Negative Bias Reverse Motion Enable/Disable	00: No AUI negative bias command 01: Negative bias: REV motion enabled 02: Negative bias: REV motion disabled	00	
04-19	AVI Analog Input Delay	0.00 to 10.00 sec	0.05	
04-20	ACI Analog Input Delay	0.00 to 10.00 sec	0.05	
04-21	AUI Analog Input Delay	0.00 to 10.00 sec	0.05	
04-22	Analog Input Frequency Resolution	00: 0.01Hz 01: 0.1Hz	01	
04-23	Gear Ratio for Simple Index Function	4 ~ 1000	200	
04-24	Index Angle for Simple Index Function	0.0 ~360.0°	180.0	
✓04-25	Deceleration Time for Simple Index Function	0.00 ~100.00 sec	0.00	

Group 5 Multi-Step Speed and PLC Parameters

Parameter	Explanation	Settings	Factory Setting	Customer
✓05-00	1st Step Speed Frequency	0.00 to 400.00 Hz	0.00	
✓05-01	2nd Step Speed Frequency	0.00 to 400.00 Hz	0.00	
✓05-02	3rd Step Speed Frequency	0.00 to 400.00 Hz	0.00	
✓05-03	4th Step Speed Frequency	0.00 to 400.00 Hz	0.00	
✓05-04	5th Step Speed Frequency	0.00 to 400.00 Hz	0.00	
✓05-05	6th Step Speed Frequency	0.00 to 400.00 Hz	0.00	
✓05-06	7th Step Speed Frequency	0.00 to 400.00 Hz	0.00	
✓05-07	8th Step Speed Frequency	0.00 to 400.00 Hz	0.00	
✓05-08	9th Step Speed Frequency	0.00 to 400.00 Hz	0.00	
✓05-09	10th Step Speed Frequency	0.00 to 400.00 Hz	0.00	
✓05-10	11th Step Speed Frequency	0.00 to 400.00 Hz	0.00	
✓05-11	12th Step Speed Frequency	0.00 to 400.00 Hz	0.00	
✓05-12	13th Step Speed Frequency	0.00 to 400.00 Hz	0.00	
✓05-13	14th Step Speed Frequency	0.00 to 400.00 Hz	0.00	
✓05-14	15th Step Speed Frequency	0.00 to 400.00 Hz	0.00	
05-15	PLC Mode	00: Disable PLC operation 01: Execute one program cycle 02: Continuously execute program cycles 03: Execute one program cycle step by step 04: Continuously execute program cycles step by step	00	
05-16	PLC Forward/ Reverse Motion	00 to 32767 (00: FWD, 01: REV)	00	
05-17	Time Duration of 1st Step Speed	00 to 65500 sec or 00 to 6550.0 sec	00	
05-18	Time Duration of 2nd Step Speed	00 to 65500 sec or 00 to 6550.0 sec	00	
05-19	Time Duration of 3rd Step Speed	00 to 65500 sec or 00 to 6550.0 sec	00	
05-20	Time Duration of 4th Step Speed	00 to 65500 sec or 00 to 6550.0 sec	00	
05-21	Time Duration of 5th Step Speed	00 to 65500 sec or 00 to 6550.0 sec	00	

Parameter	Explanation	Settings	Factory Setting	Customer
05-22	Time Duration of 6th Step Speed	00 to 65500 sec or 00 to 6550.0 sec	00	
05-23	Time Duration of 7th Step Speed	00 to 65500 sec or 00 to 6550.0 sec	00	
05-24	Time Duration of 8th Step Speed	00 to 65500 sec or 00 to 6550.0 sec	00	
05-25	Time Duration of 9th Step Speed	00 to 65500 sec or 00 to 6550.0 sec	00	
05-26	Time Duration of 10th Step Speed	00 to 65500 sec or 00 to 6550.0 sec	00	
05-27	Time Duration of 11th Step Speed	00 to 65500 sec or 00 to 6550.0 sec	00	
05-28	Time Duration of 12th Step Speed	00 to 65500 sec or 00 to 6550.0 sec	00	
05-29	Time Duration of 13th Step Speed	00 to 65500 sec or 00 to 6550.0 sec	00	
05-30	Time Duration of 14th Step Speed	00 to 65500 sec or 00 to 6550.0 sec	00	
05-31	Time Duration of 15th Step Speed	00 to 65500 sec or 00 to 6550.0 sec	00	
05-32	Time Unit Settings	00: 1 sec 01: 0.1 sec	00	
05-33	The Amplitude of Wobble Vibration	0.00~400.00 Hz	0.00	
05-34	Wobble Skip Frequency	0.00~400.00 Hz	0.00	

Group 6 Protection Parameters

Parameter	Explanation	Settings	Factory Setting	Customer
06-00	Over-Voltage Stall Prevention	230V series: 330.0V to 410.0V 460V series: 660.0V to 820.0V 575V series: 825.0V to1025.0V 00: Disable over-voltage stall prevention	390.0V 780.0V 975.0V	
06-01	Over-Current Stall Prevention during Accel	20 to 250%	170	
06-02	Over-Current Stall Prevention during Operation	20 to 250%	170	
06-03	Over-Torque Detection Mode (OL2)	00: Disabled 01: Enabled during constant speed operation. After the over-torque is detected, keep running until OL1 or OL occurs. 02: Enabled during constant speed operation. After the over-torque is detected, stop running.	00	

Parameter	Explanation	Settings	Factory Setting	Customer
06-03	Over-Torque Detection Mode (OL2)	03: Enabled during accel. After the over-torque is detected, keep running until OL1 or OL occurs. 04: Enabled during accel. After the over-torque is detected, stop running.		
06-04	Over-Torque Detection Level	10 to 200%	150	
06-05	Over-Torque Detection Time	0.1 to 60.0 sec	0.1	
06-06	Electronic Thermal Overload Relay Selection	00: Standard motor (self cooled by fan) 01: Special motor (forced external cooling) 02: Disabled	02	
06-07	Electronic Thermal Characteristic	30 to 600 sec	60	
06-08	Present Fault Record	00: No fault 01: Over current (oc) 02: Over voltage (ov) 03: Over heat (oH) 04: Over load (oL) 05: Over load (oL1) 06: External fault (EF) 07: IGBT protection (occ) 08: CPU failure (cF3) 09: Hardware protection failure (HPF) 10: Excess current during acceleration (ocA) 11: Excess current during deceleration (ocd) 12: Excess current during steady state (ocn) 13: Ground fault (GFF) 14: Reserved 15: CF1 16: CF2 17: Reserved 18: Motor over-load (oL2) 19: Auto Acel/Decel failure (CFA) 20: SW/Password protection (codE) 21: External Emergency Stop (EF1) 22: Phase-Loss (PHL) 23: Preliminary count value attained, EF active (cEF) 24: Under-current (Lc) 25: Analog feedback signal error (AnLEr) 26: PG feedback signal error (PGErr)	00	
06-09	Second Most Recent Fault Record			
06-10	Third Most Recent Fault Record			
06-11	Fourth Most Recent Fault Record			

Parameter	Explanation	Settings	Factory Setting	Customer
06-12	Under-Current Detection Level	00~100% (00: Disabled)	00	
06-13	Under-Current Detection Time	0.1~ 3600.0 sec	10.0	
06-14	Under-Current Detection Mode	00: Warn and keep operating 01: Warn and ramp to stop 02: Warn and coast to stop 03: Warn, after coast to stop, restart (delay 06-15 setting time)	00	
06-15	Under-Current Detection Restart Delay Time (Lv)	1~600 Min.	10	
06-16	User-Defined Low-Voltage Detection Level	00: Disabled 230V: 220 to 300VDC 460V: 440 to 600VDC 575V: 520 to 780VDC	00	
06-17	User-Defined Low-Voltage Detection Time	0.1~ 3600.0 sec	0.5	
06-18	Reserved			

Group 7 Motor Parameters

Parameter	Explanation	Settings	Factory Setting	Customer
✓07-00	Motor Rated Current	30 to 120%	100	
✓07-01	Motor No-Load Current	01 to 90%	40	
✓07-02	Torque Compensation	0.0 to 10.0	0.0	
✓07-03	Slip Compensation (Used without PG)	0.00 to 3.00	0.00	
07-04	Number of Motor Poles	02 to 10	04	
07-05	Motor Parameters Auto Tuning	00: Disable 01: Auto tuning R1 02: Auto tuning R1 + no-load test	00	
07-06	Motor Line-to-line Resistance R1	00~65535 mΩ	00	
07-07	Reserved			
07-08	Motor Rated Slip	0.00 to 20.00 Hz	3.00	
07-09	Slip Compensation Limit	0 to 250%	200	
07-10	Reserved			
07-11	Reserved			

Parameter	Explanation	Settings	Factory Setting	Customer
07-12	Torque Compensation Time Constant	0.01 ~10.00 Sec	0.05	
07-13	Slip Compensation Time Constant	0.05 ~10.00 sec	0.10	
07-14	Accumulative Motor Operation Time (Min.)	00 to 1439 Min.	00	
07-15	Accumulative Motor Operation Time (Day)	00 to 65535 Day	00	

Group 8 Special Parameters

Parameter	Explanation	Settings	Factory Setting	Customer
08-00	DC Braking Current Level	00 to 100%	00	
08-01	DC Braking Time during Start-Up	0.0 to 60.0 sec	0.0	
08-02	DC Braking Time during Stopping	0.0 to 60.0 sec	0.0	
08-03	Start-Point for DC Braking	0.00 to 400.00Hz	0.00	
08-04	Momentary Power Loss Operation Selection	00: Operation stops after momentary power loss 01: Operation continues after momentary power loss, speed search starts with the Master Frequency reference value 02: Operation continues after momentary power loss, speed search starts with the minimum frequency	00	
08-05	Maximum Allowable Power Loss Time	0.1 to 5.0 sec	2.0	
08-06	B.B. Time for Speed Search	0.1 to 5.0 sec	0.5	
08-07	Current Limit for Speed Search	30 to 200%	150	
08-08	Skip Frequency 1 Upper Limit	0.00 to 400.00 Hz	0.00	
08-09	Skip Frequency 1 Lower Limit	0.00 to 400.00 Hz	0.00	
08-10	Skip Frequency 2 Upper Limit	0.00 to 400.00 Hz	0.00	
08-11	Skip Frequency 2 Lower Limit	0.00 to 400.00 Hz	0.00	
08-12	Skip Frequency 3 Upper Limit	0.00 to 400.00 Hz	0.00	
08-13	Skip Frequency 3 Lower Limit	0.00 to 400.00 Hz	0.00	

Parameter	Explanation	Settings	Factory Setting	Customer
08-14	Auto Restart After Fault	00 to 10 (00=disable)	00	
08-15	Auto Energy Saving	00: Disable 01: Enable	00	
08-16	AVR Function	00: AVR function enable 01: AVR function disable 02: AVR function disable for decel.	00	
08-17	Software Braking Level	230V series: 370 to 430V 460V series: 740 to 860V 575V series: 925 to1075V	380 760 950	
08-18	Base-block Speed Search	00: Speed search starts with last frequency command 01: Starts with minimum output frequency	00	
08-19	Speed Search during Start-up	00: Speed search disable 01: Speed search enable	00	
✓08-20	Speed Search Frequency during Start-up	00: Setting frequency 01: Maximum operation frequency (01-00)	00	
08-21	Auto Reset Time at Restart after Fault	00 to 60000 sec	600	
✓08-22	Compensation Coefficient for Motor Instability	00~1000	00	

Group 9 Communication Parameters

Parameter	Explanation	Settings	Factory Setting	Customer
✓09-00	Communication Address	01 to 254	01	
✓09-01	Transmission Speed	00: Baud rate 4800bps 01: Baud rate 9600bps 02: Baud rate 19200bps 03: Baud rate 38400bps	01	
✓09-02	Transmission Fault Treatment	00: Warn and keep operating 01: Warn and ramp to stop 02: Warn and coast to stop 03: No warning and keep operating	03	
✓09-03	Time-out Detection	0.0 ~ 60.0 seconds 0.0: Disable	0.0	
✓09-04	Communication Protocol	00: 7,N,2 (Modbus, ASCII) 01: 7,E,1 (Modbus, ASCII) 02: 7,O,1 (Modbus, ASCII) 03: 8,N,2 (Modbus, RTU) 04: 8,E,1 (Modbus, RTU) 05: 8,O,1 (Modbus, RTU)	00	

Parameter	Explanation	Settings	Factory Setting	Customer
09-05	Reserved			
09-06	Reserved			
✓09-07	Response Delay Time	00 ~ 200 msec	00	

Group 10 PID Control Parameters

Parameter	Explanation	Settings	Factory Setting	Customer
10-00	Input terminal for PID Feedback	00: Inhibit PID operation 01: Negative PID feedback from external terminal (AVI) 0 to +10V 02: Negative PID feedback from external terminal (ACI) 4 to 20mA 03: Positive PID feedback from external terminal (AVI) 0 to +10V 04: Positive PID feedback from external terminal (ACI) 4 to 20mA	00	
10-01	Gain over PID Detection value	0.00 to 10.00	1.00	
✓10-02	Proportional Gain (P)	0.0 to 10.0	1.0	
✓10-03	Integral Gain (I)	0.00 to 100.00 sec (0.00=disable)	1.00	
✓10-04	Derivative Control (D)	0.00 to 1.00 sec	0.00	
10-05	Upper Bound for Integral Control	00 to 100%	100	
10-06	Primary Delay Filter Time	0.0 to 2.5 sec	0.0	
10-07	PID Output Freq Limit	0 to 110%	100	
10-08	Feedback Signal Detection Time	0.0 to 3600.0 sec	60.0	
✓10-09	Treatment of the Erroneous Feedback Signals	00: Warn and keep operation 01: Warn and RAMP to stop 02: Warn and COAST to stop	00	
10-10	PG Pulse Range	1 to 40000	600	
10-11	PG Input	00: Disable PG 01: Single phase 02: Forward / Counterclockwise rotation 03: Reverse / Clockwise rotation	00	
✓10-12	ASR (Auto Speed Regulation) control (with PG only) (P)	0.0 to 10.0	1.0	

Parameter	Explanation	Settings	Factory Setting	Customer
✓10-13	ASR (Auto Speed Regulation) control (with PG only) (I)	0.00 to 100.00 (0.00 disable)	1.00	
10-14	Speed Control Output Frequency Limit	0.00 to 100.00 Hz	10.00	
10-15	Sample time for refreshing the content of 210DH and 210EH	0.01~1.00 seconds	0.10	
10-16	Deviation Range of PID Feedback Signal Error	0.00~100.00%	100.00	

Group 11 Fan & Pump Control Parameters

Parameter	Explanation	Settings	Factory Setting	Customer
11-00	V/f Curve Selection	00: V/f curve determined by Pr.01-00 to Pr.01-06 01: 1.5 power curve 02: 1.7 power curve 03: Square curve 04: Cube curve	00	
11-01	Start-Up Frequency of the Auxiliary Motor	0.00 to 400.00 Hz	0.00	
11-02	Stop Frequency of the Auxiliary Motor	0.00 to 400.00 Hz	0.00	
11-03	Time Delay before Starting the Auxiliary Motor	0.0 to 3600.0 sec	0.0	
11-04	Time Delay before Stopping the Auxiliary Motor	0.0 to 3600.0 sec	0.0	
11-05	Sleep/Wake Up Detection Time	0.0 ~6550.0 sec	0.0	
11-06	Sleep Frequency	0.00~Fmax	0.00	
11-07	Wakeup Frequency	0.00~Fmax	0.00	

5.2 Parameter Settings for Applications

■ Speed Search

Applications	Purpose	Functions	Related Parameters
Windmill, winding machine, fan and all inertia load	Restart free-running motor	Before the free-running motor is completely stopped, it can be restarted without detecting motor speed. The AC motor drive will auto search motor speed and will accelerate when its speed is the same as the motor speed.	08-06 08-07 08-19 08-20

■ DC Braking before Running

Applications	Purpose	Functions	Related Parameters
When e.g. windmills, fans and pumps rotate freely by wind or flow without applying power	Keep the free-running motor at standstill.	If the running direction of the free-running motor is not steady, please execute DC braking before start-up.	08-00 08-01

■ Motor power switch-over between AC motor drive and commercial power

Applications	Purpose	Functions	Related Parameters
Windmills, pumps, extruders	Switching motor power between AC motor drive and commercial power	When switching motor power between AC motor drive and commercial power, it is unnecessary to stop motor or start by commercial power with heavy duty before switching to by AC motor drive control	03-00 03-01 03-02 03-03

■ Energy Saving

Applications	Purpose	Functions	Related Parameters
Punching machines and precision machinery	Energy saving and less vibrations	Energy saving when the AC motor drive runs at constant speed, yet full power acceleration and deceleration For precision machinery it also helps to lower vibrations.	08-15

■ Multi-step Operation

Applications	Purpose	Functions	Related Parameters
Conveying machinery	Cyclic operation by multi-step speeds.	To control 15-step speeds and duration by simple contact signal.	04-04~04-09 05-00~05-14

■ Switching acceleration and deceleration times

Applications	Purpose	Functions	Related Parameters
Auto turntable for conveying machinery	Switching acceleration and deceleration times by external signal	Switching multi-step acceleration/deceleration by external signal. When an AC motor drive drives two or more motors, it can reach high-speed but still start and stop smoothly.	01-09~01-12 01-18~01-21 04-04~04-09

■ Overheat Warning

Applications	Purpose	Functions	Related Parameters
Air conditioner	Safety measure	When AC motor drive overheats, it uses a thermal sensor to have overheat warning.	03-00~03-03 04-04~04-09

■ Two-wire/three-wire

Applications	Purpose	Functions	Related Parameters
General application	To run, stop, forward and reverse by external terminals	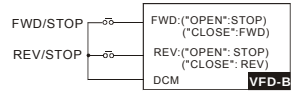 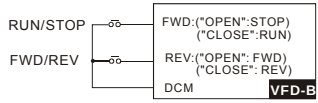 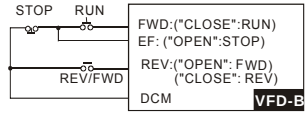	02-05 04-04~04-09

■ **Operation Command**

Applications	Purpose	Functions	Related Parameters
General application	Selecting the source of control signal	Selection of AC motor drive control by external terminals, digital keypad or RS485.	03-01 04-04~04-09

■ **Frequency Hold**

Applications	Purpose	Functions	Related Parameters
General application	Acceleration/ deceleration pause	Hold output frequency during Acceleration/deceleration	04-04~04-09

■ **Auto Restart after Fault**

Applications	Purpose	Functions	Related Parameters
Air conditioners, remote pumps	For continuous and reliable operation without operator intervention	The AC motor drive can be restarted/reset automatically up to 10 times after a fault occurs.	08-14~08-21

■ **Emergency Stop by DC Braking**

Applications	Purpose	Functions	Related Parameters
High-speed rotors	Emergency stop without braking resistor	AC motor drive can use DC barking for emergency stop when quick stop is needed without braking resistor. When used often, take motor cooling into consideration.	08-00 08-02 08-03

■ **Over-torque Setting**

Applications	Purpose	Functions	Related Parameters
Pumps, fans and extruders	To protect machines and to have continuous/ reliable operation	The over-torque detection level can be set. Once OC stall, OV stall and over-torque occurs, the output frequency will be adjusted automatically. It is suitable for machines like fans and pumps that require continuous operation.	06-00~06-05

■ Upper/Lower Limit Frequency

Applications	Purpose	Functions	Related Parameters
Pump and fan	Control the motor speed within upper/lower limit	When user cannot provide upper/lower limit, gain or bias from external signal, it can be set individually in AC motor drive.	01-07 01-08

■ Skip Frequency Setting

Applications	Purpose	Functions	Related Parameters
Pumps and fans	To prevent machine vibrations	The AC motor drive cannot run at constant speed in the skip frequency range. Three skip frequency ranges can be set.	08-00~08-13

■ Carrier Frequency Setting

Applications	Purpose	Functions	Related Parameters
General application	Low noise	The carrier frequency can be increased when required to reduce motor noise.	02-03

■ Keep Running when Frequency Command is Lost

Applications	Purpose	Functions	Related Parameters
Air conditioners	For continuous operation	When the frequency command is lost by system malfunction, the AC motor drive can still run. Suitable for intelligent air conditioners.	02-07

■ Display the Speed of Load

Applications	Purpose	Functions	Related Parameters
General application	Display running status	Display motor speed(rpm) and machine speed(rpm) on keypad.	00-04 03-05

■ **Output Signal during Running**

Applications	Purpose	Functions	Related Parameters
General application	Provide a signal for running status	Signal available to stop braking when the AC motor drive is running. (This signal will disappear when the AC motor drive is free-running.)	03-00~03-03

■ **Output Signal in Zero Speed**

Applications	Purpose	Functions	Related Parameters
General application	Provide a signal for running status	When the output frequency is lower than the min. output frequency, a signal is given for external system or control wiring.	03-00~03-03

■ **Output Signal at Desired Frequency**

Applications	Purpose	Functions	Related Parameters
General application	Provide a signal for running status	When the output frequency is at the desired frequency (by frequency command), a signal is given for external system or control wiring.	03-00~03-03

■ **Output Signal for Base Block**

Applications	Purpose	Functions	Related Parameters
General application	Provide a signal for running status	When executing Base Block, a signal is given for external system or control wiring.	03-00~03-03

■ **Overheat Warning for Heat Sink**

Applications	Purpose	Functions	Related Parameters
General application	For safety	When heat sink is overheated, it will send a signal for external system or control wiring.	03-00~03-03

■ Multi-function Analog Output

Applications	Purpose	Functions	Related Parameters
General application	Display running status	The value of frequency, output current/voltage can be read by adding a frequency meter or voltage/current meter.	03-05

5.3 Description of Parameter Settings

Group 0: User Parameters

00 - 00	Identity Code of the AC motor drive	
	Settings Read Only	Factory setting: ##
00 - 01	Rated Current Display of the AC motor drive	
	Settings Read Only	Factory setting: #.#

📖 Pr. 00-00 displays the identity code of the AC motor drive. The capacity, rated current, rated voltage and the max. carrier frequency relate to the identity code. Users can use the following table to check how the rated current, rated voltage and max. carrier frequency of the AC motor drive correspond to the identity code.

📖 Pr.00-01 displays the rated current of the AC motor drive. By reading this parameter the user can check if the AC motor drive is correct.

230V Series												
kW	0.75	1.5	2.2	3.7	5.5	7.5	11	15	18.5	22	30	37
HP	1.0	2.0	3.0	5.0	7.5	10	15	20	25	30	40	50
Pr.00-00	04	06	08	10	12	14	16	18	20	22	24	26
Rated Output Current (A)	5.0	7.0	11	17	25	33	49	65	75	90	120	146
Max. Carrier Frequency	15kHz									9 kHz		

460V Series															
kW	0.75	1.5	2.2	3.7	5.5	7.5	11	15	18.5	22	30	37	45	55	75
HP	1.0	2.0	3.0	5.0	7.5	10	15	20	25	30	40	50	60	75	100
Pr.00-00	05	07	09	11	13	15	17	19	21	23	25	27	29	31	33
Rated Output Current (A)	2.7	4.2	5.5	8.5	13	18	24	32	38	45	60	73	91	110	150
Max. Carrier Frequency	15 kHz									9 kHz				6 kHz	

575V Series															
kW	0.75	1.5	2.2	3.7	5.5	7.5	11	15	18.5	22	30	37	45	55	75
HP	1.0	2.0	3.0	5.0	7.5	10	15	20	25	30	40	50	60	75	100
Pr.00-00	100	101	102	103	104	105	106	107	108	109	110	111	112	113	114
Rated Output Current (A)	1.7	3.5	4.5	7.5	10	13.5	19	22	27	34	41	52	62	80	100
Max. Carrier Frequency	10 kHz							8 kHz						6 kHz	

00 - 02 Parameter Reset

Factory Setting: 00

Settings	08	Keypad Lock
	09	All parameters are reset to factory settings (50Hz, 220V/380V/575V)
	10	All parameters are reset to factory settings (60Hz, 220V/440V/575V)

This parameter allows the user to reset all parameters to the factory settings except the fault records (Pr.06-08 ~ Pr.06-11).

50Hz: Pr.01-01 is set to 50Hz and Pr.01-02 is set to 230V, 400V or 575V.

60Hz: Pr.01-01 is set to 60Hz and Pr.01-02 is set to 230V, 460V or 575V.

When Pr.00-02=08, the VFD-PU01 keypad is locked. To unlock the keypad, set Pr.00-02=00.

00 - 03 ✓Start-up Display Selection

Factory Setting: 00

Settings	00	Display the frequency command value. (LED F)
	01	Display the actual output frequency (LED H)
	02	Display the content of user-defined unit (LED U)
	03	Multifunction display, see Pr.00-04
	04	FWD/REV command

This parameter determines the start-up display page after power is applied to the drive.

00 - 04 ✓Content of Multi-Function Display

Factory Setting: 00

Settings	00	Display the output current in A supplied to the motor	A 20
	01	Display the counter value which counts the number of pulses on TRG terminal	c 20
	02	When the PLC function is active, the current step and its remaining operation time in s are shown.	6 23
	03	Display the actual DC BUS voltage in VDC of the AC motor drive	u 310.3
	04	Display the output voltage in VAC of terminals U, V, W to the motor.	E 220.3
	05	Display the power factor angle in º of terminals U, V, W to the motor.	n 00
	06	Display the output power in kW of terminals U, V and W to the motor.	P 0.00

00 - 04	✓Content of Multi-Function Display	
07	Display the actual motor speed in rpm (enabled in vector control mode or PG (Encoder) feedback control) (LED H and LED U).	
08	Display the estimated value of torque in Nm as it relates to current.	
09	Display PG encoder feedback pulses/10ms. Display value= (rpm*PPR)/6000 (see note)	
10	Display analog feedback signal value in %.	
11	Display the signal of AVI analog input terminal in %. Range 0~10V corresponds to 0~100%. (LED U)	
12	Display the signal of ACI analog input terminal in %. Range 4~20mA corresponds to 0~100%. (LED U)	
13	Display the signal of AUI analog input terminal in %. Range -10V~10V corresponds to 0~100%. (LED U)	
14	Display the temperature of heat sink in ˚C.	

📖 This parameter sets the display when Pr. 00-03 is set to 03.

📖 Pr.00-04=09. The display value is (((rpm/60)*PPR)/1000ms)*10ms

with rpm=motor speed in revs/min and PPR=encoder pulse per revolution

📖 When the display shows the multi-function display (Pr.00-03=03), the user also can view other information by pressing the "LEFT" key ◀ on the VFD-PU01 keypad.

00 - 05	✓User Defined Coefficient K	Unit: 0.01
Settings	0.01 to d 160.00	Factory Setting: 1.00

📖 The coefficient K determines the multiplying factor for the user-defined unit.

The display value is calculated as follows:

U (User-defined unit) = Frequency Command * K (Pr.00-05)

H (actual output) = Actual output frequency * K (Pr.00-05)

Example:

A conveyor belt runs at 13.6m/s at motor speed 60Hz.

K = 13.6/60 = 0.23 (0.226667 rounded to 2 decimals), therefore Pr.00-05=0.23

With Frequency command 35Hz, display shows LED U and 35*0.23=8.05m/s.

(To increase accuracy, use K=2.27 or K=22.67 and disregard decimal point.)

00 - 06	Software Version	
	Settings	Read Only
	Display	#.##

00 - 07	Password Input		Unit: 1
	Settings	00 to 65535	Factory Setting: 00
	Display	00~02 (times of wrong password)	

The function of this parameter is to input the password that is set in Pr.00-08. Input the correct password here to enable changing parameters. You are limited to a maximum of 3 attempts. After 3 consecutive failed attempts, a blinking “PcodE” will show up to force the user to restart the AC motor drive in order to try again to input the correct password.

00 - 08	Password Set		Unit: 1
	Settings	00 to 65535	Factory Setting: 00
	Display	00	No password set or successful input in Pr. 00-07
		01	Password has been set

To set a password to protect your parameter settings.

If the display shows 00, no password is set or password has been correctly entered in Pr.00-07. All parameters can then be changed, including Pr.00-08.

The first time you can set a password directly. After successful setting of password the display will show 01.

Be sure to record the password for later use.

To cancel the parameter lock, set the parameter to 00 after inputting correct password into Pr. 00-07.

The password consists of min. 2 digits and max. 5 digits.

How to make the password valid again after decoding by Pr.00-07:

Method 1: Re-input original password into Pr.00-08 (Or you can enter a new password if you want to use a changed or new one).

Method 2: After rebooting, password function will be recovered.

Password Decode Flow Chart

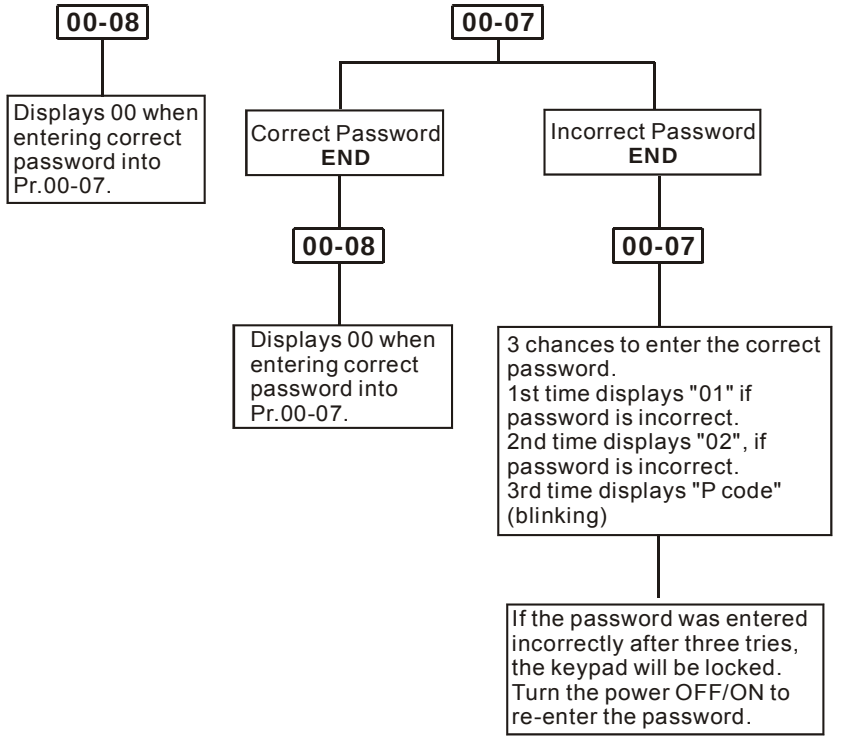

00 - 09 Control method

Factory Setting: 00

Settings	00	V/f control
	01	V/f + PG Control
	02	Vector Control
	03	Vector + PG Control

- This parameter determines the control method of the AC motor drive.
- PG is encoder (Pulse Generator) feedback for which an option PG card is required.

00 - 10 Reserved

Group 1: Basic Parameters

01 - 00	Maximum Output Frequency (Fmax)	Unit: 0.01
	Settings 50.00 to 400.00 Hz	Factory Setting: 60.00

This parameter determines the AC motor drive's Maximum Output Frequency. All the AC motor drive frequency command sources (analog inputs 0 to +10V, 4 to 20mA and -10V to +10V) are scaled to correspond to the output frequency range.

01 - 01	Maximum Voltage Frequency (Fbase)	Unit: 0.01
	Settings 0.10 to 400.00Hz	Factory Setting: 60.00

This value should be set according to the rated frequency of the motor as indicated on the motor nameplate. Maximum Voltage Frequency determines the v/f curve ratio. For example, if the drive is rated for 460 VAC output and the Maximum Voltage Frequency is set to 60Hz, the drive will maintain a constant ratio of 7.66 V/Hz (460V/60Hz=7.66V/Hz). This parameter value must be equal to or greater than the Mid-Point Frequency (Pr.01-03).

01 - 02	Maximum Output Voltage (Vmax)	Unit: 0.1
	Settings 230V series 0.1 to 255.0V	Factory Setting: 220.0
	460V series 0.1 to 510.0V	Factory Setting: 440.0
	575V series 0.1 to 637.0V	Factory Setting: 575.0

This parameter determines the Maximum Output Voltage of the AC motor drive. The Maximum Output Voltage setting must be smaller than or equal to the rated voltage of the motor as indicated on the motor nameplate. This parameter value must be equal to or greater than the Mid-Point Voltage (Pr.01-04).

01 - 03	Mid-Point Frequency (Fmid)	Unit: 0.01
	Settings 0.10 to 400.00Hz	Factory Setting: 0.50

This parameter sets the Mid-Point Frequency of the V/f curve. With this setting, the V/f ratio between Minimum Frequency and Mid-Point frequency can be determined. This parameter must be equal to or greater than Minimum Output Frequency (Pr.01-05) and equal to or less than Maximum Voltage Frequency (Pr.01-01).

01 - 04	Mid-Point Voltage (Vmid)			Unit: 0.1
	Settings	230V series	0.1 to 255.0V	Factory Setting: 1.7
		460V series	0.1 to 510.0V	Factory Setting: 3.4
		575V series	0.1 to 637.0V	Factory Setting: 4.8

📖 This parameter sets the Mid-Point Voltage of any V/f curve. With this setting, the V/f ratio between Minimum Frequency and Mid-Point Frequency can be determined. This parameter must be equal to or greater than Minimum Output Voltage (Pr.01-06) and equal to or less than Maximum Output Voltage (Pr.01-02).

📖 This parameter is ineffective when Pr.11-00 is set to 1 to 4.

01 - 05	Minimum Output Frequency (Fmin)		Unit: 0.01
	Settings	0.10 to 400.00Hz	Factory Setting: 0.50

📖 This parameter sets the Minimum Output Frequency of the AC motor drive. This parameter must be equal to or less than Mid-Point Frequency (Pr.01-03).

📖 The settings of 01-03, 01-04, and 01-06 are invalid in Vector Control mode.

01 - 06	Minimum Output Voltage (Vmin)			Unit: 0.1
	Settings	230V series	0.1 to 255.0V	Factory Setting: 1.7
		460V series	0.1 to 510.0V	Factory Setting: 3.4
		575V series	0.1 to 637.0V	Factory Setting: 4.8

This parameter sets the Minimum Output Voltage of the AC motor drive. This parameter must be equal to or less than Mid-Point Voltage (Pr.01-04).

📖 The settings of Pr.01-01 to Pr.01-06 have to meet the condition of Pr.01-02 ≥ Pr.01-04 ≥ Pr.01-06 and Pr.01-01 ≥ Pr.01-03 ≥ Pr.01-05.

01 - 07	Output Frequency Upper Limit		Unit: 1
	Settings	1 to 120%	Factory Setting: 100

📖 This parameter must be equal to or greater than the Output Frequency Lower Limit (Pr.01-08). The Maximum Output Frequency (Pr.01-00) is regarded as 100%.

📖 Output Frequency Upper Limit value = (Pr.01-00 * Pr.01-07)/100.

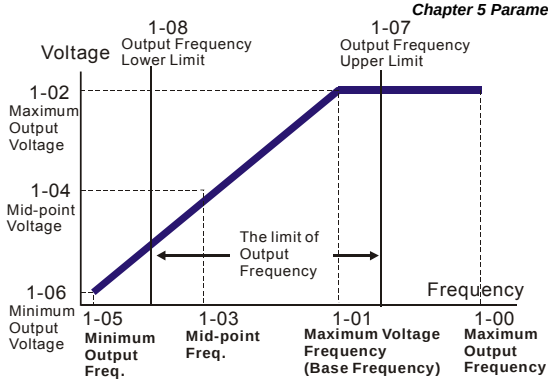

V/f Curve

01 - 08	Output Frequency Lower Limit	Unit: 1
	Settings 0 to 100%	Factory Setting: 0

- The Upper/Lower Limits are to prevent operation errors and machine damage.
- If the Output Frequency Upper Limit is 50Hz and the Maximum Output Frequency is 60Hz, the Output Frequency will be limited to 50Hz.
- If the Output Frequency Lower Limit is 10Hz, and the Minimum Output Frequency (Pr.01-05) is set to 1.0Hz, then any Command Frequency between 1.0-10Hz will generate a 10Hz output from the drive.
- This parameter must be equal to or less than the Output Frequency Upper Limit (Pr.01-07).
- The Output Frequency Lower Limit value = (Pr.01-00 * Pr.01-08) /100.

01 - 09	✓Acceleration Time 1 (Taccel 1)	Unit: 0.1/0.01
01 - 10	✓Deceleration Time 1 (Tdecel 1)	Unit: 0.1/0.01
01 - 11	✓Acceleration Time 2 (Taccel 2)	Unit: 0.1/0.01
01 - 12	✓Deceleration Time 2 (Tdecel 2)	Unit: 0.1/0.01
01 - 18	✓Acceleration Time 3 (Taccel 3)	Unit: 0.1/0.01
01 - 19	✓Deceleration Time 3 (Tdecel 3)	Unit: 0.1/0.01
01 - 20	✓Acceleration Time 4 (Taccel 4)	Unit: 0.1/0.01
01 - 21	✓Deceleration Time 4 (Tdecel 4)	Unit: 0.1/0.01
	Settings 0.01 to 3600.0 sec	Factory Setting: 10.0

- Factory setting for models of 30hp (22kW) and above is 60sec.

01 - 23 Accel/Decel Time Unit

Factory Setting: 01

Settings	00	Unit: 1 sec
	01	Unit: 0.1 sec
	02	Unit: 0.01 sec

- The Acceleration Time is used to determine the time required for the AC motor drive to ramp from 0 Hz to Maximum Output Frequency (Pr.01-00). The rate is linear unless S-Curve is "Enabled", see Pr.01-16.
- The Deceleration Time is used to determine the time required for the AC motor drive to decelerate from the Maximum Output Frequency (Pr.01-00) down to 0 Hz. The rate is linear unless S-Curve is "Enabled.", see Pr.01-17.
- The Acceleration/Deceleration Time 1, 2, 3, 4 are selected according to the Multi-Function Input Terminals Settings. See Pr.04-04 to Pr.04-09 for more details.
- In the diagram shown below, the Acceleration/Deceleration Time of the AC motor drive is the time between 0 Hz to Maximum Output Frequency (Pr.01-00). Suppose the Maximum Output Frequency is 60 Hz, Minimum Output Frequency (Pr.01-05) is 1.0 Hz, and Acceleration/Deceleration Time is 10 seconds. The actual time for the AC motor drive to accelerate from start-up to 60 Hz and to decelerate from 60Hz to 1.0Hz is in this case 9.83 seconds. ((60-1) * 10 /60=9.83secs).

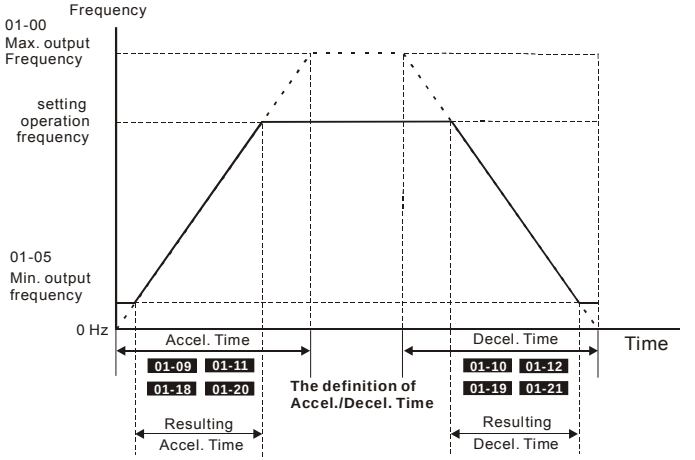

Resulting Accel./Decel. Time

01 - 13	✓Jog Acceleration Time	Unit: 0.1
	Settings 0.1 to 3600.0 sec	Factory Setting: 1.0
01 - 22	✓Jog Deceleration Time	Unit: 0.1
	Settings 0.1 to 3600.0 sec	Factory Setting: 1.0
01 - 14	✓Jog Frequency	Unit: 0.1
	Settings 0.10 to 400.00Hz	Factory Setting: 1.0

Both external terminal JOG and key "JOG" on the keypad can be used. When the Jog command is "ON", the AC motor drive will accelerate from Minimum Output Frequency (Pr.01-05) to Jog Frequency (Pr.01-14). When the Jog command is "OFF", the AC motor drive will decelerate from Jog Frequency to zero. The used Accel/Decel time is set by the Jog Accel/Decel time (Pr.01-13, Pr.01-22).

Before using the JOG command, the drive must be stopped first. And during Jog operation, other operation commands cannot be accepted, except command via the FORWARD, REVERSE and STOP keys on the digital keypad.

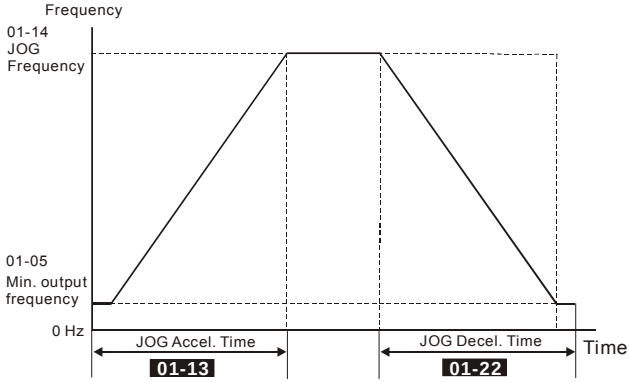

The definition of JOG Accel./Decel. Time

01 – 15	✓Auto-Acceleration / Deceleration	
		Factory Setting: 00
Settings	00	Linear acceleration / deceleration
	01	Auto acceleration, linear Deceleration.
	02	Linear acceleration, auto Deceleration.
	03	Auto acceleration / deceleration (set by load)
	04	Auto acceleration / deceleration (set by Accel/Decel Time setting)

- With Auto acceleration / deceleration it is possible to reduce vibration and shocks during starting/stopping the load.
  During Auto acceleration the torque is automatically measured and the drive will accelerate to the set frequency with the fastest acceleration time and the smoothest start current.
  During Auto deceleration, regenerative energy is measured and the motor is smoothly stopped with the fastest deceleration time.
  But when this parameter is set to 04, the actual accel/decel time will be equal to or more than parameter Pr.01-09 ~Pr.01-12 and Pr.01-18 to Pr.01-21.
- Auto acceleration/deceleration makes the complicated processes of tuning unnecessary. It makes operation efficient and saves energy by acceleration without stall and deceleration without braking resistor.
- In applications with brake resistor or brake unit, Auto deceleration shall not be used.

01 – 16	Acceleration S-Curve
01 – 17	Deceleration S-Curve

Factory Setting: 00

Settings	00	S-curve disabled
	01 to 07	S-curve enabled (07 is smoothest)

- This parameter is used to ensure smooth acceleration and deceleration via S-curve.
  The S-curve is disabled when set to 00 and enabled when set to 01 to 07.
  Setting 01 gives the quickest and setting 07 the longest and smoothest S-curve.
  The AC motor drive will not follow the Accel/Decel Times in Pr.01-09 to Pr.01-12 and Pr.01-18 to Pr.01-21 when S-curve is enabled.
- The diagram below shows that the original setting of the Accel/Decel Time is only for reference when the S-curve is enabled. The actual Accel/Decel Time depends on the selected S-curve (01 to 07).

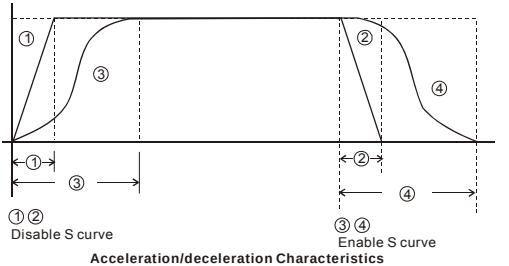

Acceleration/deceleration Characteristics

Group 2: Operation Method Parameters

02 – 00 ✓Source of First Master Frequency Command

Factory Setting: 00

Settings	00	Digital keypad (PU01) UP/DOWN keys or Multi-function Inputs UP/DOWN. Last used frequency saved.
	01	AVI 0 ~ +10VDC
	02	ACI 4 ~ 20mA
	03	AUI -10 ~ +10VDC
	04	RS-485 serial communication (RJ-11). Last used frequency saved.
	05	RS-485 serial communication (RJ-11). Last used frequency not saved.
	06	Combined use of master and auxiliary frequency command See Pr. 02-10 to 02-12

02 – 13 ✓Source of Second Master Frequency Command

Factory Setting: 00

Settings	00	Digital keypad UP/DOWN keys or Multi-function Inputs UP/DOWN. Last used frequency saved.
	01	AVI 0 ~ +10VDC
	02	ACI 4 ~ 20mA
	03	AUI -10 ~ +10VDC
	04	RS-485 serial communication (RJ-11). Last used frequency saved.
	05	RS-485 serial communication (RJ-11). Last used frequency not saved.
	06	Combined use of master and auxiliary frequency command See Pr. 02-10 to 02-12

📖 These parameters set the Master Frequency Command Source of the AC motor drive.

02 – 01 ✓Source of First Operation Command

Factory Setting: 00

Settings	00	Digital keypad (PU01)
	01	External terminals. Keypad STOP/RESET enabled.
	02	External terminals. Keypad STOP/RESET disabled.
	03	RS-485 serial communication (RJ-11). Keypad STOP/RESET enabled.
	04	RS-485 serial communication (RJ-11). Keypad STOP/RESET disabled.

02 - 14 ✓Source of Second Operation Command

Factory Setting: 00

Settings	00	Digital keypad (PU01)
	01	External terminals. Keypad STOP/RESET enabled.
	02	External terminals. Keypad STOP/RESET disabled.
	03	RS-485 serial communication (RJ-11). Keypad STOP/RESET enabled.
	04	RS-485 serial communication (RJ-11). Keypad STOP/RESET disabled.

📖 When the AC motor drive is controlled by external terminal, please refer to Pr.02-05 for details.

📖 The first /second frequency/operation command is enabled/disabled by Multi Function Input Terminals. Please refer to of Pr.04-04 ~ 04-09.

02 - 10 ✓Source of the Master Frequency Command

Factory Setting: 00

Settings	00	Digital keypad (PU01) UP/DOWN keys or Multi-function Inputs UP/DOWN. Last used frequency saved.
	01	AVI 0 ~ +10VDC
	02	ACI 4 ~ 20mA
	03	AUI -10 ~ +10VDC
	04	RS-485 serial communication (RJ-11). Last used frequency saved.

02 - 11 ✓Source of the Auxiliary Frequency Command

Factory Setting: 00

Settings	00	Digital keypad (PU01) UP/DOWN keys or Multi-function Inputs UP/DOWN. Last used frequency saved.
	01	AVI 0 ~ +10VDC
	02	ACI 4 ~ 20mA
	03	AUI -10 ~ +10VDC
	04	RS-485 serial communication (RJ-11). Last used frequency saved.

02 - 12 ✓Combination of the Master and Auxiliary Frequency Command

Factory Setting: 00

Settings	00	Master frequency + Auxiliary frequency
	01	Master frequency - Auxiliary frequency

📖 These three parameters (Pr.02-10~02-12) are enabled when Pr.02-00 or Pr.02-13 are set to 06. If they are enabled, the frequency command will be determined by these parameters.

02 - 02 Stop Method

Factory Setting: 00

Settings	00	STOP: ramp to stop	E.F.: coast to stop
	01	STOP: coast to stop	E.F.: coast to stop
	02	STOP: ramp to stop	E.F.: ramp to stop
	03	STOP: coast to stop	E.F.: ramp to stop

The parameter determines how the motor is stopped when the AC motor drive receives a valid stop command or detects External Fault.

1. Ramp: the AC motor drive decelerates to Minimum Output Frequency (Pr.01-05) according to the deceleration time and then stops.
2. Coast: the AC motor drive stops the output instantly upon command, and the motor free runs until it comes to a complete standstill.
3. The motor stop method is usually determined by the characteristics of the motor load and how frequently it is stopped.
   (1) It is recommended to use “ramp to stop” for safety of personnel or to prevent material from being wasted in applications where the motor has to stop after the drive is stopped. The deceleration time has to be set accordingly.
   (2) If the motor free running is allowed or the load inertia is large, it is recommended to select “coast to stop”.

For example: blowers, punching machines, centrifuges and pumps.

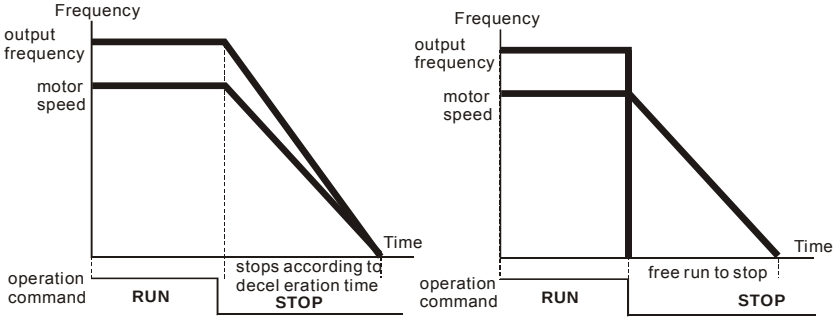

ramp to stop and free run to stop

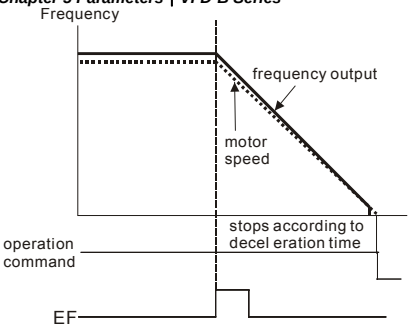

When Pr.02-02 is set to 2 or 3

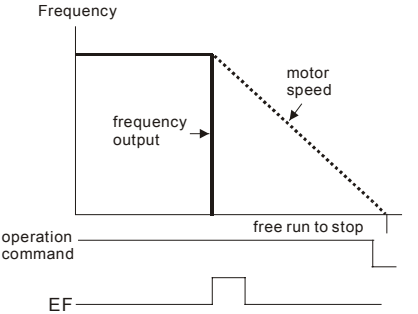

When Pr.02-02 is set to 0 or 1

02 - 03 PWM Carrier Frequency Selections

Unit: 1

230V/460V Series				
Power	1-5hp 0.75-3.7kW	7.5-25hp 5.5-18.5kW	30-60hp 22-45kW	75-100hp 55-75kW
Setting Range	01-15 kHz	01-15 kHz	01-09 kHz	01-06 kHz
Factory Setting	15 kHz	09 kHz	06 kHz	06 kHz

575V Series			
Power	1-15hp 0.75-11kW	20-60hp 15-45kW	75-100hp 55-75kW
Setting Range	01-10 kHz	01-08 kHz	01-06 kHz
Factory Setting	06 kHz	06 kHz	06 kHz

This parameter determines the PWM carrier frequency of the AC motor drive.

Carrier Frequency	Acoustic Noise	Electromagnetic Noise or leakage current	Heat Dissipation	Current Wave
1kHz	Significant	Minimal	Minimal	Minimal
8kHz				
15kHz	Minimal	Significant	Significant	Significant

From the table, we see that the PWM carrier frequency has a significant influence on the electromagnetic noise, AC motor drive heat dissipation, and motor acoustic noise.

02 - 04 Motor Direction Control

Factory Setting: 00

Settings	00	Enable Forward/Reverse operation
	01	Disable Reverse operation
	02	Disabled Forward operation

The parameter determines the AC motor drive direction of rotation. See Chapter 2 for definition of direction of rotation.

02 - 05 2-wire/ 3-wire Operation Control Modes

Factory Setting: 00

Settings	00	2-wire: FWD/STOP, REV/STOP
	01	2-wire: FWD/REV, RUN/STOP
	02	3-wire Operation

There are three different types of control modes:

	02-05	External Terminal
00	2-wire FWD /STOP REV / STOP	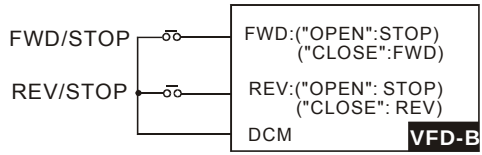
01	2-wire FWD/ REV RUN / STOP	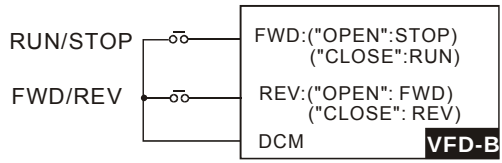
02	3-wire	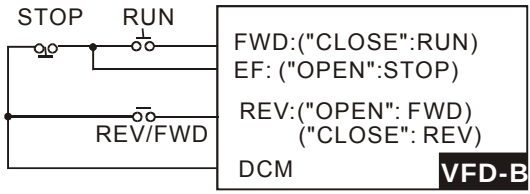

02- 06 Line Start Lockout

Factory Setting: 00

Settings	00	Disable. Operation status is not changed even if operation command source Pr.02-01 and/or Pr.02-14 is changed.
	01	Enable. Operation status is not changed even if operation command source Pr.02-01 and/or Pr.02-14 is changed.
	02	Disable. Operation status will change if operation command source Pr.02-01 and/or Pr.02-14 is changed.
	03	Enable. Operation status will change if operation command source Pr.02-01 and/or Pr.02-14 is changed.

This parameter determines the response of the drive when power on and operation command source is changed.

Pr.02-06	Start lockout (Run when power is ON)	Operation status when operation command source is changed
0	Disable (AC motor drive will run)	Keep previous status
1	Enable (AC motor drive won't run)	Keep previous status
2	Disable (AC motor drive will run)	Change according to the new operation command source
3	Enable (AC motor drive won't run)	Change according to the new operation command source

When the operation command source is from external terminal and operation command is ON (FWD/REV-DCM=close), the AC motor drive will operate according to Pr.02-06 after power is applied. **<For terminals FWD and REV only>**

1. When Pr.02-06 is set to 0 or 2, AC motor drive will run immediately.
2. When Pr.02-06 is set to 1 or 3, AC motor drive will remain stopped until operation command is received after previous operation command is cancelled.

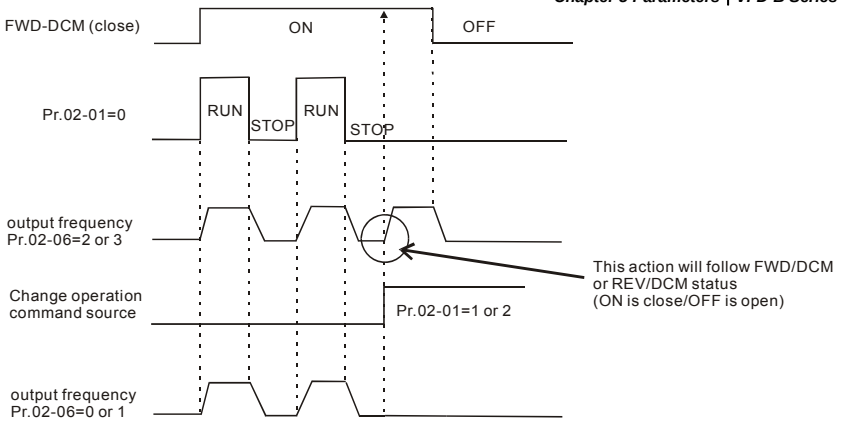

When the operation command source isn't from the external terminals, independently from whether the AC motor drive runs or stops, the AC motor drive will operate according to Pr.02-06 if the two conditions below are both met.

1. When operation command source is changed to external terminal (Pr.02-01=1 or 2, Pr.02-14=1 or 2)
2. The status of terminal and AC motor drive is different.

And the operation of the AC motor drive will be:

1. When setting 0 or 1, the status of AC motor drive is not changed by the terminal status.
2. When setting 2 or 3, the status of AC motor drive is changed by the terminal status.

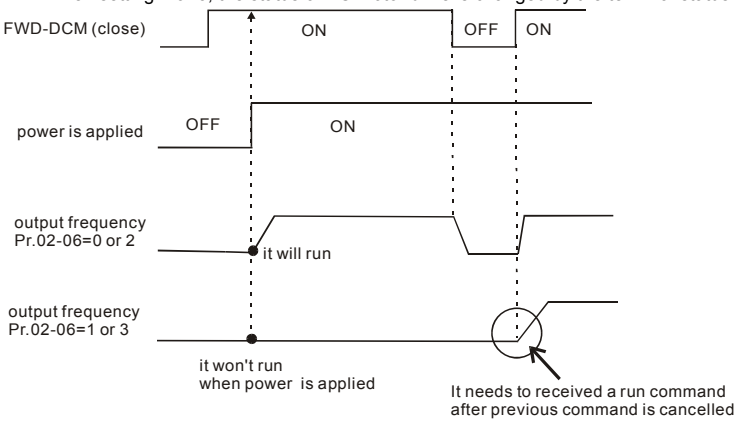

⚠ The Line Start Lockout feature does not guarantee that the motor will never start under this condition. It is possible the motor may be set in motion by a malfunctioning switch.

02- 07	Loss of ACI Signal (4-20mA)		
			Factory Setting: 00
	Settings	00	Decelerate to 0Hz
		01	Coast to stop and display “EF”
		02	Continue operation by the last frequency command

📖 This parameter determines the behavior when ACI is lost.

📖 When set to 00 or 02, it will display warning message “AnLEr” on the keypad in case of loss of ACI signal and execute the setting. When ACI signal is recovered, the warning message usually disappears automatically. If the warning message is still displayed, please press “MODE” key to make it disappear.

02 - 08	✓Up/Down Mode		
			Factory Setting: 00
	Settings	00	Based on Accel/Decel time acc. to Pr.01-09 to 01-12 and Pr.01-18 to 01-21
		01	Constant speed (acc. to Pr. 02-09)
		02	Based on Accel/Decel time acc. to Pr.01-09 to 01-12 and Pr.01-18 to 01-21, but frequency command will be 0 when stopped

02 - 09	✓Accel/Decel Rate of Change of UP/DOWN Operation with Constant Speed	Unit: 0.01
Settings	0.01~1.00 Hz/ms	Factory Setting: 0.01

📖 These parameters determine the increase/decrease of the master frequency when operated via the Multi-Function Inputs when Pr.04-04~Pr.04-09 are set to 11 (Up command) or 12 (Down command).

02 - 15	✓Keyboard Frequency Command	Unit: 0.01
Settings	0.00 ~ 400.00Hz	Factory Setting: 60.00

📖 This parameter can be used to set frequency command or read keypad frequency command.

Group 3: Output Function Parameters

03 - 00	Multi-function Output Relay (RA1, RB1, RC1)
	Factory Setting: 08
03 – 01	Multi-function Output Terminal MO1
	Factory Setting: 01
03 - 02	Multi-function Output Terminal MO2
	Factory Setting: 02
03 - 03	Multi-function Output Terminal MO3
	Factory Setting: 20

Settings	Function	Description
00	No Function	
01	AC Drive Operational	Active when there is an output from the drive or RUN command is “ON”.
02	Master Frequency Attained	Active when the AC motor drive reaches the output frequency setting.
03	Zero Speed	Active when Command Frequency is lower than the Minimum Output Frequency.
04	Over-Torque Detection	Active as long as over-torque is detected. (Refer to Pr.06-03 ~ Pr.06-05)
05	Baseblock (B.B.) Indication	Active when the output of the AC motor drive is shut off during baseblock. Base block can be forced by Multi-function input (setting 9 or 10).
06	Low-Voltage Indication	Active when low voltage(Lv) is detected.
07	Operation Mode Indication	Active when operation command is controlled by external terminal.
08	Fault Indication	Active when faults occur (oc, ov, oH, oL, oL1, EF, cF3, HPF, ocA, ocd, ocn, GFF).
09	Desired Frequency Attained 1	Active when the desired frequency (Pr.03-04) is attained.
10	PLC Program Running	Active when PLC Program is running.
11	PLC Program Step Completed	Active for 0.5 sec each time the multi-step speed is attained.
12	PLC Program Completed	Active for 0.5 sec when the PLC program cycle has completed
13	PLC Operation Paused	Active when PLC operation is paused.

Settings	Function	Description
14	Terminal Count Value Attained	Active when the counter reaches Terminal Count Value.
15	Preliminary Count Value Attained	Active when the counter reaches Preliminary Count Value.
16 17 18	Auxiliary Motor 1, 2 and 3	For the fan & pump control applications, one can use the Multi-function Output Terminals (1-3) to define the auxiliary motor. When using with group 10 PID Controls and group 11 Fan and Pump Control, it can control flow of many motors.
19	Heat Sink Overheat Warning (OH1)	When heatsink overheats, it will signal to prevent OH turn off the drive. When it is higher than 85°C (185°F), it will be ON. Or it will be OFF.
20	AC Motor Drive Ready	Active when the drive is on and no abnormality detected.
21	Emergency Stop Indication	Active once the drive's emergency stop function is activated.
22	Desired Frequency Attained 2	Active when the desired frequency (Pr.03-10) is attained.
23	Software Braking Signal	This function is used in conjunction with a VFDB Braking Unit. The output will be activated when the drive needs help braking the load. A smooth deceleration is achieved by using this function.
24	Zero Speed Output Signal	Active unless there is an output frequency present at terminals U/T1, V/T2, and W/T3.
25	Under-current Detection	Active once the drive's current has fallen below its minimum allowable value. (Refer to Pr.06-12, 06-13)
26	Operation Indication (H>=Fmin)	Active when there is output voltage from U, V, W.
27	Feedback Signal Error	Active when the feedback signal is abnormal. (Refer to Pr.10-08, Pr.10-16)
28	User-defined Low-voltage Detection	Active once the DC Bus voltage is too low. (Refer to Pr.06-16, Pr.06-17)
29	Brake Control (Desired Frequency Attained 3)	Active when output frequency ≥Pr.03-13. Deactivated when output frequency ≤Pr.03-14 after STOP command.

03 - 04	Desired Frequency Attained 1	Unit: 0.01
	Settings 0.00 to 400.00 Hz	Factory Setting: 0.00

03 - 10	Desired Frequency Attained 2	Unit: 0.01
Settings	0.00 to 400.00 Hz	Factory Setting: 0.00

If a multi-function output terminal is set to function as Desired Frequency Attained 1 or 2 (Pr.03-00 to Pr.03-03 = 09 or 22), then the output will be activated when the programmed frequency is attained.

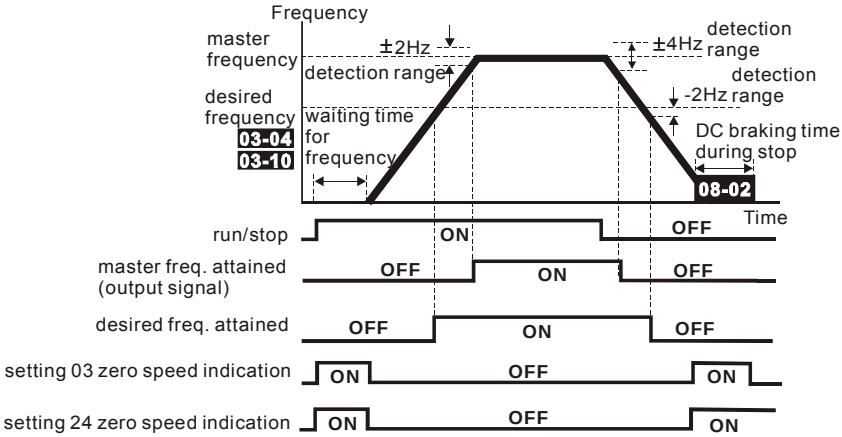

output timing chart of multiple function terminals when setting to frequency attained or zero speed indication

03 - 05	Analog Output Signal (AFM)	
		Factory Setting: 00
Settings	00	Analog Frequency Meter (0 to Maximum Output Frequency)
	01	Analog Current Meter (0 to 250% of rated AC motor drive current)
	02	Output voltage (0 to Pr.01-02)
	03	Output frequency command (0 to Maximum Frequency)
	04	Output motor speed (0 to the Maximum Frequency)
	05	Load power factor (cos90° to 0°)

This parameter sets the function of the AFM output 0~+10VDC (ACM is common).

03 - 06	✓Analog Output Gain	Unit: 1
Settings	01 to 200%	Factory Setting: 100

This parameter sets the voltage range of the analog output signal.

- When Pr.03-05 is set to 0, the analog output voltage is directly proportional to the output frequency of the AC motor drive. With Pr.03-06 set to 100%, the Maximum Output Frequency (Pr.01-00) of the AC motor drive corresponds to +10VDC on the AFM output.
- Similarly, if Pr.03-05 is set to 1, the analog output voltage is directly proportional to the output current of the AC drive. With Pr.03-06 set to 100%, then 2.5 times the rated current corresponds to +10VDC on the AFM output.

NOTE

Any type of voltmeter can be used. If the meter reads full scale at a voltage less than 10 volts, the parameter 03-06 should be set using the following formula:

Pr. 03-06 = ((meter full scale voltage)/10) x 100%

For Example: When using the meter with full scale of 5 volts, adjust Pr.03-06 to 50%. If Pr.03-05 is set to 0, then 5VDC will correspond to Maximum Output Frequency.

03 - 07	✓Digital Output Multiplying Factor	Unit: 1
Settings	01 to 20 times	Factory Setting: 01

- This parameter determines the multiplying factor for the AC drives digital output frequency at the digital output terminals (DFM-DCM). The pulse frequency is equal to the AC motor drive output frequency multiplied by Pr.03-07. (Pulse frequency = actual output frequency x Pr.03-07)

03 - 08	✓Terminal Count Value	Unit: 1
Settings	00 to 65500	Factory Setting: 00

- This parameter sets the count value of the internal counter. The external terminal TRG increases the internal counter. Upon completion of counting, the specified output terminal will be activated. (Pr.03-00 to Pr.03-03 set to 14).
- When the display shows c5555, the drive has counted 5,555 times. If display shows c5555•, it means that real counter value is between 55,550 to 55,559.

03 - 09	✓ Preliminary Count Value	Unit: 1
Settings	00 to 65500	Factory Setting: 00

When the counter value reaches this value, the corresponding multi-function output terminal will be activated, provided one of Pr.03-00 to Pr.03-03 set to 15 (Preliminary Count Value Setting). This multi-function output terminal will be deactivated upon completion of Terminal Count Value Attained.

The timing diagram:

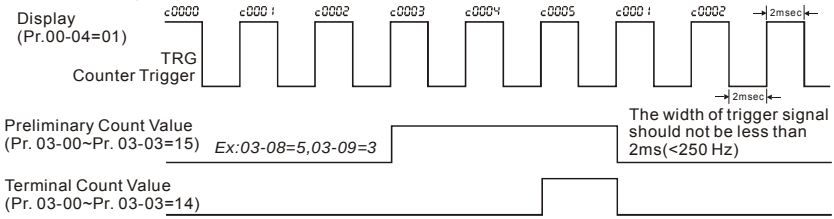

03 - 11	EF Active when Preliminary Count Value Attained	
		Factory Setting: 00
Settings	00	Preliminary count value attained, no EF display
	01	Preliminary count value attained, EF active

If this parameter is set to 01 and the desired value of counter is attained, the AC drive will treat it as a fault. The drive will stop and show the “cEF” message on the display.

03 - 12	Fan Control	
		Factory Setting: 00
Settings	00	Fan always ON
	01	1 minute after AC motor drive stops, fan will be OFF
	02	AC motor drive runs and fan ON, AC motor drive stops and fan OFF
	03	Fan ON to run when preliminary heatsink temperature attained

This parameter determines the operation mode of cooling fan.

03 - 13	Brake Release Frequency	Unit: 0.01
Settings	0.00 to 400.00Hz	Factory Setting: 0.00
03 - 14	Brake Engage Frequency	Unit: 0.01
Settings	0.00 to 400.00Hz	Factory Setting: 0.00

These two parameters are used to set control of mechanical brake via the output terminals (MO1~MO3) when Pr.03-00~03-03 is set to 29. Refer to the following example for details.

Example:

1. Case 1: Pr.03-14 ≥ Pr.03-13
2. Case 2: Pr.03-14 ≤ Pr.03-13

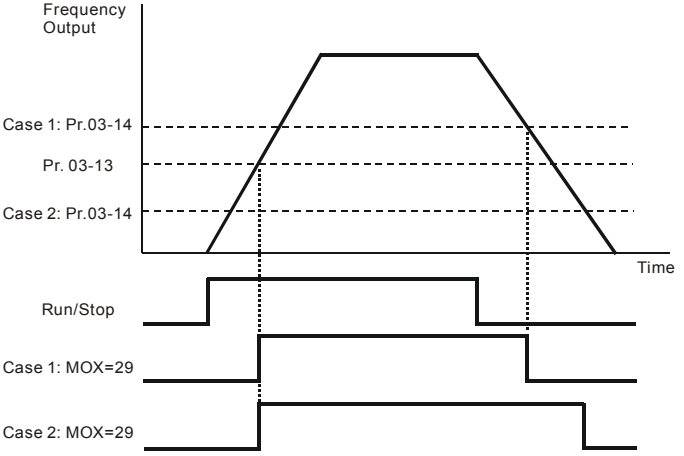

Note: MOX: setting value of Pr.03-00~Pr.03-03

Group 4: Input Function Parameters

04 - 00	✓AVI Analog Input Bias		Unit: 0.01
	Settings	0.00 to 200.00%	Factory Setting: 0.00
04 - 01	AVI Bias Polarity		
			Factory Setting: 00
	Settings	00 Positive Bias	
		01 Negative Bias	
04 - 02	✓AVI Input Gain		Unit: 1
	Settings	1 to 200%	Factory Setting: 100
04 - 03	AVI Negative Bias, Reverse Motion Enable/Disable		
			Factory Setting: 00
	Settings	00 No AVI Negative Bias Command	
		01 Negative Bias: REV Motion Enabled	
		02 Negative Bias: REV Motion Disabled	
04 - 11	✓ACI Analog Input Bias		Unit: 0.01
	Settings	0.00 to 200.00%	Factory Setting: 0.00
04 - 12	ACI Bias Polarity		
			Factory Setting: 00
	Settings	00 Positive Bias	
		01 Negative Bias	
04 - 13	✓ACI Input Gain		Unit: 1
	Settings	01 to 200%	Factory Setting: 100
04 - 14	ACI Negative Bias, Reverse Motion Enable/Disable		
			Factory Setting: 00
	Settings	00 No ACI Negative Bias Command	
		01 Negative Bias: REV Motion Enabled	
		02 Negative Bias: REV Motion Disabled	
04 - 15	✓AUI Analog Input Bias		Unit: 0.01
	Settings	0.00 to 200.00%	Factory Setting: 0.00
04 - 16	AUI Bias Polarity		
			Factory Setting: 00
	Settings	00 Positive Bias	
		01 Negative Bias	
04 - 17	✓AUI Input Gain		Unit: 1
	Settings	01 to 200%	Factory Setting: 100

04 - 18 AUI Negative Bias, Reverse Motion Enable/Disable

Factory Setting: 00

Settings	00	No AUI Negative Bias Command
	01	Negative Bias: REV Motion Enabled
	02	Negative Bias: REV Motion Disabled

- In a noisy environment, it is advantageous to use negative bias to provide a noise margin.
- Pr.04-00 ~ 04-03, Pr.04-11 ~ 04-18 are used when the source of frequency command is the analog signal. Refer to the following examples.

Example 1: Standard application

This is the most used setting. The user only needs to set Pr.02-00 to 01, 02 or 03. The frequency command comes from external potentiometer/current signal on AVI, ACI or AUI.

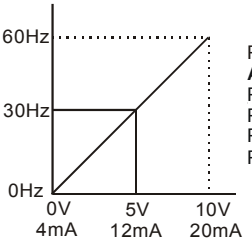

Pr.01-00=60Hz--Max. output Freq.

AVI	ACI	AUI
Pr.04-00	Pr.04-11	Pr.04-15=0%--Bias adjustment
Pr.04-01	Pr.04-12	Pr.04-16=0--Positive bias
Pr.04-02	Pr.04-13	Pr.04-17=100%--Input gain
Pr.04-03	Pr.04-14	Pr.04-18=0No negative bias command

Example 2: Use of bias

This example shows the influence of changing the bias. When the input is 0V (4mA) the output frequency is 10 Hz. At mid-point a potentiometer will give 40 Hz. Once the Maximum Output Frequency is reached, any further increase of the potentiometer or signal will not increase the output frequency. (To use the full potentiometer range, please refer to Example 3.) The value of external input voltage/current 0-8.33V (4-17.33mA) corresponds to the setting frequency 10-60Hz.

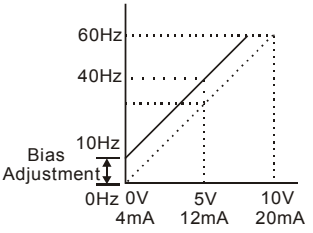

Pr.01-00=60Hz--Max. output Freq.

AVI	ACI	AUI
Pr.04-00	Pr.04-11	Pr.04-15=16.7%--Bias adjustment
Pr.04-01	Pr.04-12	Pr.04-16=0--Positive bias
Pr.04-02	Pr.04-13	Pr.04-17=100%--Input gain
Pr.04-03	Pr.04-14	Pr.04-18=0--No negative bias command

Gain:100%

Bias adjustment:((10Hz/60Hz)/(Gain/100%))*100%=16.7%

Example 3: Use of bias and gain for use of full range

This example also shows a popular method. The whole scale of the potentiometer can be used as desired. In addition to signals of 0 to 10V and 4 to 20mA, the popular voltage signals also include signals of 0 to 5V, 4 to 20mA or any value under 10V. Regarding the setting, please refer to the following examples.

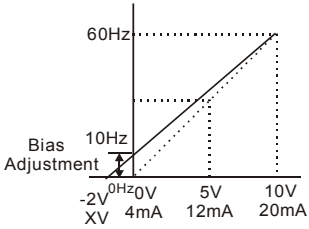

Pr.01-00=60Hz--Max. output Freq.

AVI	ACI	AUI
Pr.04-00	Pr.04-11	Pr.04-15=20.0%--Bias adjustment
Pr.04-01	Pr.04-12	Pr.04-16=0--Positive bias
Pr.04-02	Pr.04-13	Pr.04-17=83.3%--Input gain
Pr.04-03	Pr.04-14	Pr.04-18=0--No negative bias command

Gain:(10V/(10V+2V))*100%=83.3%

Bias adjustment:((10Hz/60Hz)/(Gain/100%))*100%=20.0%

Example 4: Use of 0-5V potentiometer range via gain adjustment

This example shows a potentiometer range of 0 to 5 Volts. Instead of adjusting gain as example below, you can set Pr. 01-00 to 120Hz to achieve the same results.

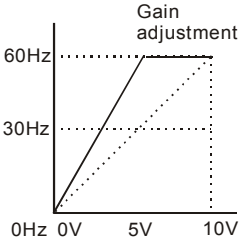

Pr.01-00=60Hz--Max. output Freq.

AVI	AUI
Pr.04-00	Pr.04-15=0.0%--Bias adjustment
Pr.04-01	Pr.04-16=0--Positive bias
Pr.04-02	Pr.04-17=200%--Input gain
Pr.04-03	Pr.04-18=0--No negative bias command

Gain:(10V/5V)*100%=200%

Example 5: Use of negative bias in noisy environment

In this example, a 1V negative bias is used. In noisy environments it is advantageous to use negative bias to provide a noise margin (1V in this example).

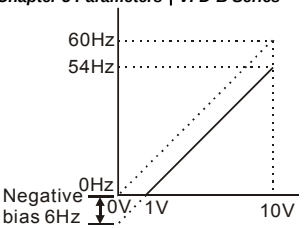

Pr.01-00=60Hz--Max. output Freq.

AVI	**AUI**
Pr.04-00	Pr.04-15=10.0%--Bias adjustment
Pr.04-01	Pr.04-16=1--Negative bias
Pr.04-02	Pr.04-17=100%--Input gain
Pr.04-03	Pr.04-18=0--No negative bias command

Gain:100%

Bias adjustment:((6Hz/60Hz)/(Gain/100%))*100%=10.0%

Example 6: Use of negative bias in noisy environment and gain adjustment to use full potentiometer range

In this example, a negative bias is used to provide a noise margin. Also a potentiometer frequency gain is used to allow the Maximum Output Frequency to be reached.

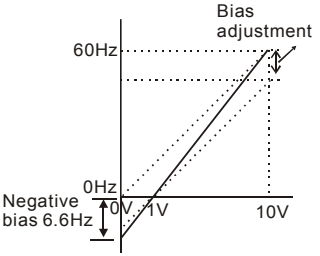

Pr.01-00=60Hz--Max. output Freq.

AVI	**AUI**
Pr.04-00	Pr.04-15=10.0%--Bias adjustment
Pr.04-01	Pr.04-16=1--Negative bias
Pr.04-02	Pr.04-17=111%--Input gain
Pr.04-03	Pr.04-18=0--No negative bias command

Gain:(10V/9V)*100%=111%

Bias adjustment:((6.6Hz/60Hz)/(Gain/100%))*100%=10.0%

Example 7: Use of 0-10V potentiometer signal to run motor in FWD and REV direction

In this example, the input is programmed to run a motor in both forward and reverse direction. The motor will be idle when the potentiometer position is at mid-point of its scale. Using this example will disable the external FWD and REV controls.

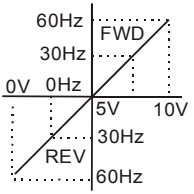

Pr.01-00=60Hz--Max. output Freq.

AVI	**AUI**
Pr.04-00	Pr.04-15=50.0%--Bias adjustment
Pr.04-01	Pr.04-16=1--Negative bias
Pr.04-02	Pr.04-17=200%--Input gain
Pr.04-03	Pr.04-18=1--Negative bias: REV motion enabled

Gain:(10V/5V)*100%=200%

Bias adjustment:((60Hz/60Hz)/(Gain/100%))*100%=200%

Example 8: Use negative slope

In this example, the use of negative slope is shown. Negative slopes are used in applications for control of pressure, temperature or flow. The sensor that is connected to the input generates a large signal (10V or 20mA) at high pressure or flow. With negative slope settings, the AC motor drive will slow stop the motor. With these settings the AC motor drive will always run in only one direction (reverse). This can only be changed by exchanging 2 wires to the motor.

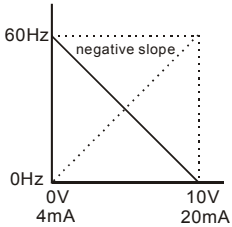

Pr.01-00=60Hz--Max. output Freq.

AVI	ACI	AUI
Pr.04-00	Pr.04-11	Pr.04-15=100%--Bias adjustment
Pr.04-01	Pr.04-12	Pr.04-16=0--Positive bias
Pr.04-02	Pr.04-13	Pr.04-17=100%--Input gain
Pr.04-03	Pr.04-14	Pr.04-18=1--Negative bias: REV motion enabled

Gain:(10V/10V)*100%=100%

Bias adjustment:((60Hz/60Hz)/(Gain/100%))*100%=100%

04 - 19	AVI Analog Input Delay	Unit: 0.01
	Settings 0.00 to 10.00 sec	Factory Setting: 0.05
04 - 20	ACI Analog Input Delay	Unit: 0.01
	Settings 0.00 to 10.00 sec	Factory Setting: 0.05
04 - 21	AUI Analog Input Delay	Unit: 0.01
	Settings 0.00 to 10.00 sec	Factory Setting: 0.05

📖 These input delays can be used to filter noisy analog signals.

04 - 22	Analog Input Frequency Resolution	
		Factory Setting: 01
	Settings 00 0.01Hz	
	01 0.1Hz	

📖 It is used to set the unit of the resolution of frequency command when the input source is analog signal.

04 - 04	Multi-function Input Terminal (MI1)
	Factory Setting: 01
04 - 05	Multi-function Input Terminal (MI2)
	Factory Setting: 02
04 - 06	Multi-function Input Terminal (MI3)
	Factory Setting: 03
04 - 07	Multi-function Input Terminal (MI4)
	Factory Setting: 04
04 - 08	Multi-function Input Terminal (MI5)
	Factory Setting: 05
04 - 09	Multi-function Input Terminal (MI6)
	Factory Setting: 06

Settings	Function	Description
00	No Function	Any unused terminals should be programmed to 0 to insure they have no effect on operation.
01	Multi-Step Speed Command 1	These four inputs select the multi-speed defined by Pr.05-00 to Pr.05-14 as shown in the diagram at the end of this table. **NOTE: Pr.05-00 to Pr.05-14 can also be used to control output speed by programming the AC motor drive's internal PLC function. There are 17 step speed frequencies (including Master Frequency and Jog Frequency) to select for application.**
02	Multi-Step Speed Command 2	
03	Multi-Step Speed Command 3	
04	Multi-Step Speed Command 4	
05	External Reset (N.O.)	The External Reset has the same function as the Reset key on the Digital keypad. After faults such as O.H., O.C. and O.V. are cleared this input can be used to reset the drive.
06	Accel/Decel Inhibit	When the command is active, acceleration and deceleration is stopped and the AC motor drive maintains a constant speed.
07	Accel/Decel Time Selection Command 1	Used to select the one of four Accel/Decel Times (Pr.01-09 to Pr.01-12, Pr.01-18 to Pr.01-21). See explanation at the end of this table.
08	Accel/Decel Time Selection Command 2	

Settings	Function	Description
09	External Base Block (N.O.) (Refer to Pr. 08-06)	Parameter values 9, 10 program Multi-Function Input Terminals for external Base Block control. **NOTE: When a Base-Block signal is received, the AC motor drive will block all output and the motor will free run. When base block control is deactivated, the AC drive will start its speed search function and synchronize with the motor speed, and then accelerate to Master Frequency.**
10	External Base Block (N.C.) (Refer to Pr. 08-06)	
11	UP: Increment Master Frequency	Increment/decrement the Master Frequency each time an input is received or continuously when the input stays active. When both inputs are active at the same time, the Master Frequency increment/decrement is halted. Please refer to Pr.02-08, 02-09. This function is also called “motor potentiometer”.
12	DOWN: Decrement Master Frequency	
13	Counter Reset	When active, the counter is reset and inhibited. To enable counting the input should be OFF. Refer to Pr.03-08 and 03-09.
14	Run PLC Program	To run the AC motor drive internal PLC program. **NOTE: Pr.05-00 to Pr.05-16 define the PLC program.**
15	Pause PLC Program	When the PLC program runs, a Multi-Function Input Terminal, when set to 15, can be used to pause the PLC program.
16	Auxiliary Motor No.1 output disable	Parameter value 16 to 18 program Multi-Function Input Terminal to disable the corresponding auxiliary motor via the AC motor drive Multi-function Output Terminals Pr.03-00 to 3-03 (Relay and MO1 to MO3) when set to 16-18.
17	Auxiliary Motor No.2 output disable	
18	Auxiliary Motor No.3 output disable	
19	Emergency Stop (N.O.)	When set to 19 or 20, the Multi-Function Input Terminal can be used to stop the AC motor drive in case of malfunction in the application. It will display “EF1”. Please “RESET” after the fault has been cleared. Refer to Pr.02-02 for Stop Method.
20	Emergency Stop (N.C.)	
21	Master Frequency Selection AVI/ACI	ON: ACI OFF: AVI Pr.02-00 and Pr.02-13 are disabled if this parameter value 21 is set. See the explanation below the table.
22	Master Frequency Selection AVI/AUI	ON: AUI OFF: AVI Pr.02-00 and Pr.02-13 are disabled if this parameter value 22 is set. See the explanation below the table.
23	Operation Command Selection (keypad PU01/external terminals)	ON: Operation command via Ext. Terminals OFF: Operation command via Keypad PU01 Pr.02-01 and Pr.02-14 are disabled if this parameter value 23 is set. See the explanation below the table.
24	Auto accel/decel mode disable	ON: Linear accel/decel (Auto accel/decel mode set by Pr.01-15 disabled) OFF: Auto accel/decel mode

Settings	Function	Description
25	Forced Stop (N.C.)	These two parameters have the same function as the "STOP" command with stop method acc. to Pr.02-02. No error message is displayed. When parameter value 25 or 26 is enabled, a new RUN command is needed.
26	Forced Stop (N.O.)	
27	Parameter lock enable (N.O.)	When this setting is enabled, all parameters will be locked and write parameters is disabled.
28	PID function disabled	When input ON with this setting, PID function will be disabled.
29	Jog FWD/REV command	ON: REV OFF: FWD This command will be effective only when external terminal JOG is active.
30	External Reset (N.C.)	The function is the same as setting 05 but for use with normally close contact.
31	Source of second frequency command enabled	Used to select the first/second frequency command source. Refer to Pr.02-00 and 02-13. ON: 2nd Frequency command source OFF: 1st Frequency command source
32	Source of second operation command enabled	Used to select the first/second operation command source. Refer to Pr.02-01 and 02-14. ON: 2nd Operation command source OFF: 1st Operation command source
33	One shot PLC	The function is the same as setting 14 but the trigger signal is a one shot pulse, for example: a push button input. It can be cancelled by a "STOP" command.
34	Proximity sensor input for simple Index function	This function should be used with Pr.04-23 ~ Pr.04-25.
35	Output Shutoff Stop (N.O.)	AC motor drive will stop output and the motor free run if one of these settings is enabled. If the status of terminal is changed, AC motor drive will restart from 0Hz.
36	Output Shutoff Stop (N.C.)	

📖 N.O.= Normally Open.

N.C.= Normally Closed.

📖 When parameter value 21 and 22 are set and these two terminals are ON, the priority of analog input signals are AVI > ACI > AUI.

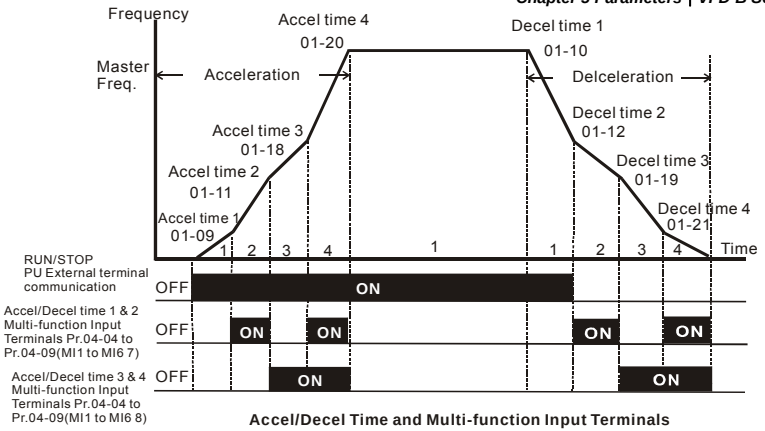

Accel/Decel Time and Multi-function Input Terminals

	MI2=08	MI1=07
Accel/decel time 1	OFF	OFF
Accel/decel time 2	OFF	ON
Accel/decel time 3	ON	OFF
Accel/decel time 4	ON	ON

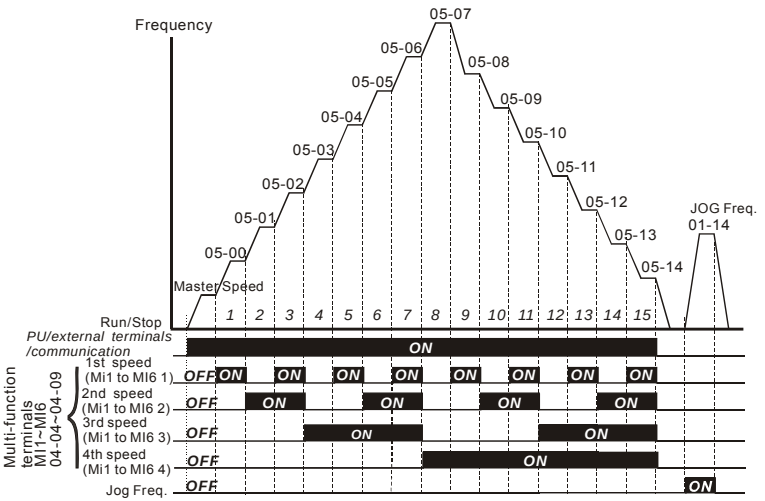

Multi-speed via External Terminals

	MI4=4	MI3=3	MI2=2	MI1=1
Master frequency	OFF	OFF	OFF	OFF
1st speed	OFF	OFF	OFF	ON
2nd speed	OFF	OFF	ON	OFF
3rd speed	OFF	OFF	ON	ON
4th speed	OFF	ON	OFF	OFF
5th speed	OFF	ON	OFF	ON
6th speed	OFF	ON	ON	OFF
7th speed	OFF	ON	ON	ON
8th speed	ON	OFF	OFF	OFF
9th speed	ON	OFF	OFF	ON
10th speed	ON	OFF	ON	OFF
11th speed	ON	OFF	ON	ON
12th speed	ON	ON	OFF	OFF
13th speed	ON	ON	OFF	ON
14th speed	ON	ON	ON	OFF
15th speed	ON	ON	ON	ON

04 - 10 Digital Terminal Input Debouncing Time

Unit: 2

Settings 1 to 20

Factory Setting: 1

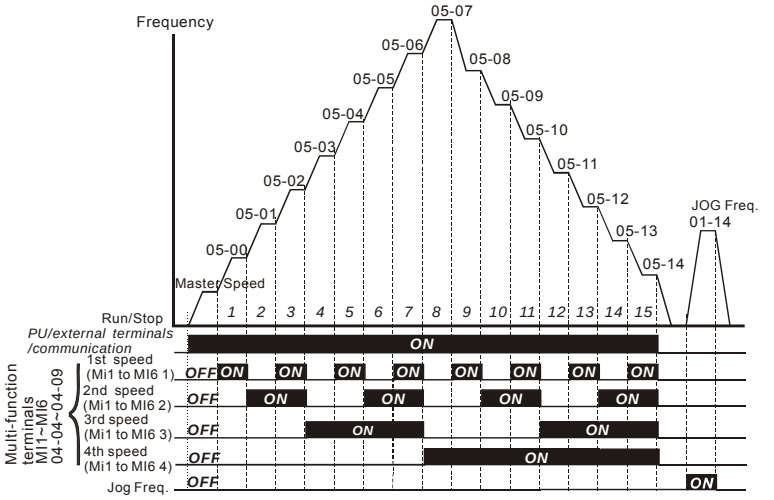

Multi-speed via External Terminals

This parameter is to delay the signals on digital input terminals. 1 unit is 2 msec, 2 units are 4 msec, etc. The delay time is to debounce noisy signals that could cause the digital terminals to malfunction.

04 - 23	Gear Ratio for Simple Index Function	Unit: 1
	Settings 4 ~ 1000	Factory Setting: 200
04 - 24	Index Angle for Simple Index Function	Unit: 0.1
	Settings 0.0 ~360.0°	Factory Setting: 180.0
04 - 25	Deceleration Time for Simple Index Function	Unit: 0.01
	Settings 0.00 ~100.00 sec	Factory Setting: 0.00

The simple index function is used to position the machine/motor at the same position when it stops. The function should be used with setting 34 for Multi-Function Input Terminals (04-04 to 04-09).

The function diagram is shown below. The machine is driven by a gear motor or other reduction gearbox. The trigger position of the proximity sensor is used as the starting point of the index angle. When the stop command is initiated, the AC motor drive will not decelerate until the proximity sensor is triggered. After that the AC motor drive begins to decelerate and stop according to the Pr.04-24 and Pr.04-25.

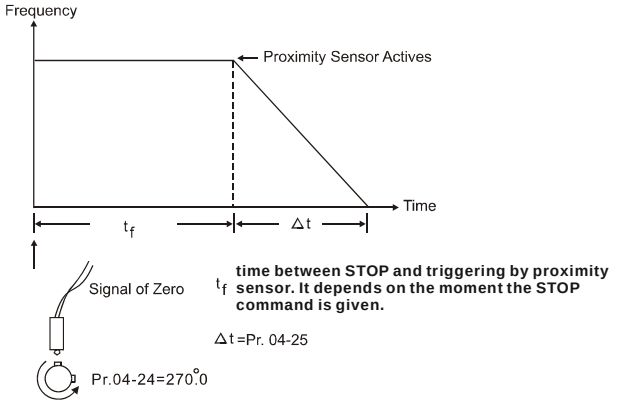

Group 5: Multi-step speeds and PLC (Process Logic Control) parameters

05 - 00	✓1st Step Speed Frequency	Unit: 0.01
05 - 01	✓2nd Step Speed Frequency	Unit: 0.01
05 - 02	✓3rd Step Speed Frequency	Unit: 0.01
05 - 03	✓4th Step Speed Frequency	Unit: 0.01
05 - 04	✓5th Step Speed Frequency	Unit: 0.01
05 - 05	✓6th Step Speed Frequency	Unit: 0.01
05 - 06	✓7th Step Speed Frequency	Unit: 0.01
05 - 07	✓8th Step Speed Frequency	Unit: 0.01
05 - 08	✓9th Step Speed Frequency	Unit: 0.01
05 - 09	✓10th Step Speed Frequency	Unit: 0.01
05 - 10	✓11th Step Speed Frequency	Unit: 0.01
05 - 11	✓12th Step Speed Frequency	Unit: 0.01
05 - 12	✓13th Step Speed Frequency	Unit: 0.01
05 - 13	✓14th Step Speed Frequency	Unit: 0.01
05 - 14	✓15th Step Speed Frequency	Unit: 0.01

Factory Setting: 0.00

Settings 0.00 to 400.00 Hz

📖 The Multi-Function Input Terminals (refer to Pr.04-04 to 04-09) are used to select one of the AC motor drive Multi-step speeds. The speeds (frequencies) are determined by Pr.05-00 to 05-14 as shown above. They are also used in conjunction with Pr.05-15 to 05-31 for PLC programs.

05 - 15	PLC Mode

Factory Setting: 00

Settings	00	Disable PLC operation
	01	Execute one program cycle
	02	Continuously execute program cycles
	03	Execute one program cycle step by step
	04	Continuously execute program cycles step by step

📖 This parameter selects the mode of PLC operation for the AC motor drive. The AC motor drive will change speeds and directions according to the desired user programming.

📖 This parameter can be applied in the PLC operation of general small machines, food processing machines and washing equipment.

Example 1 (Pr.05-15 = 1): Execute one cycle of the PLC program. The parameter settings are:

1. Pr.05-00 to 05-14: 1st to 15th speed (sets the frequency of each speed)
2. Pr.04-04 to 04-09: Multi-Function Input Terminals (set one multi-function terminal as 14 - PLC auto-operation).
3. Pr.03-00 to 03-03: Multi-Function Output Terminals (set a Multi-Function Terminal as 10-PLC running indication, 11-PLC step completed and/or 12-PLC program completed).
4. Pr.05-15: PLC mode setting.
5. Pr.05-16: Direction of operation for the 1st to 15th speed.
6. Pr.05-17 to 05-31: Operation time setting of the 1st to 15th speed.

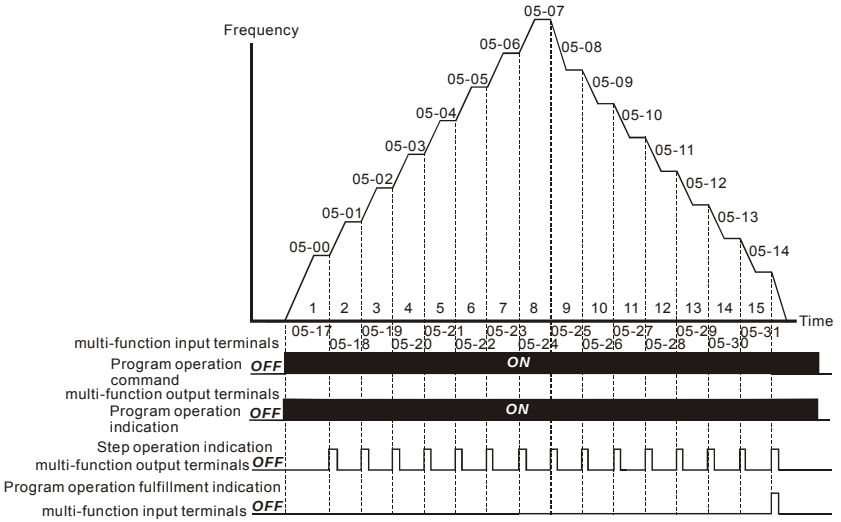

NOTE

The above diagram shows one complete PLC cycle. To restart the cycle, turn the PLC program off and on again.

Example 2 (Pr.05-15 = 2): Continuously execute program cycles:

The diagram above shows the PLC program stepping through each speed. Setting Pr.05-15 to 2 continuously executes the program. To stop the PLC program, one must either pause the program or turn it off. (Refer to Pr.04-04 to 04-09 values 14 and 15).

Example 3 (Pr.05-15 = 3) Execute one cycle step by step:

The example below shows how the PLC can perform one cycle at a time, within a complete cycle. Each step will use the accel/decel times in Pr.01-09 to Pr.01-12. Note that the actual time each step stays at its intended frequency is reduced, due to the time for accel/decel.

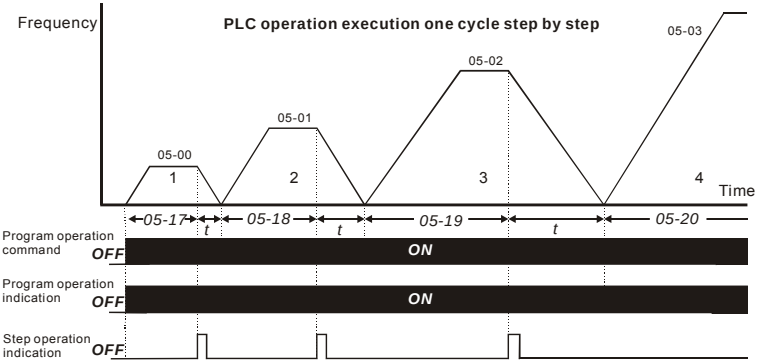

05 - 16	PLC Forward/Reverse Motion	Unit: 1
Settings	00 to 32767	Factory Setting: 00

This parameter controls the direction of motion for the Multi-Step Speeds Pr.05-00 to Pr.05-14 during PLC mode. All other direction commands are invalid during the PLC mode.

NOTE

The equivalent 15-bit number is used to program the forward/reverse motion for each of the 15 speed steps. The binary notation for the 15-bit number must be translated into decimal notation and then entered.

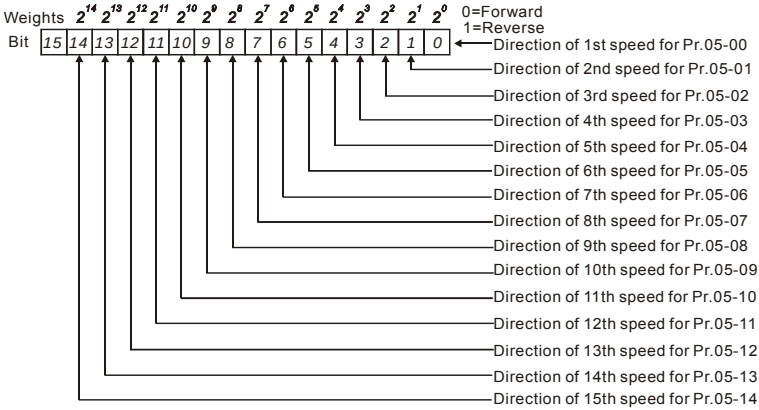

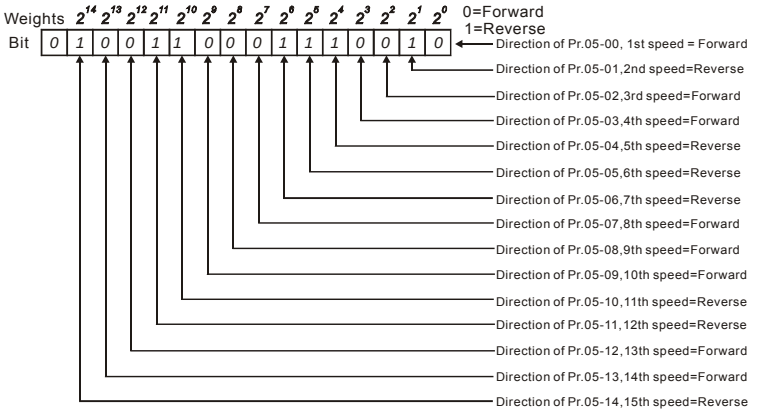

The setting value

$= bit14x2^{14}+bit13x2^{13}+....+bit2x2^{2}+bit1x2^{1}+bit0x2^{0}$

$= 1x2^{14}+1x2^{11}+1x2^{10}+1x2^{6}+1x2^{5}+1x2^{4}+1x2^{1}$

$=16384+2048+1024+64+32+16+2 = 19570$

Setting 05-16

NOTE:

$2^{14}=16384$ $2^{13}=8192$ $2^{12}=4096$ $2^{11}=2048$ $2^{10}=1024$

$2^{9}=512$ $2^{8}=256$ $2^{7}=128$ $2^{6}=64$ $2^{5}=32$

$2^{4}=16$ $2^{3}=8$ $2^{2}=4$ $2^{1}=2$ $2^{0}=1$

05 - 17	Time Duration of 1st Step Speed	Unit: 1 or 0.1sec (See Pr.05-32)
05 - 18	Time Duration of 2nd Step Speed	Unit: 1 or 0.1sec (See Pr.05-32)
05 - 19	Time Duration of 3rd Step Speed	Unit: 1 or 0.1sec (See Pr.05-32)
05 - 20	Time Duration of 4th Step Speed	Unit: 1 or 0.1sec (See Pr.05-32)
05 - 21	Time Duration of 5th Step Speed	Unit: 1 or 0.1sec (See Pr.05-32)
05 - 22	Time Duration of 6th Step Speed	Unit: 1 or 0.1sec (See Pr.05-32)
05 - 23	Time Duration of 7th Step Speed	Unit: 1 or 0.1sec (See Pr.05-32)
05 - 24	Time Duration of 8th Step Speed	Unit: 1 or 0.1sec (See Pr.05-32)
05 - 25	Time Duration of 9th Step Speed	Unit: 1 or 0.1sec (See Pr.05-32)
05 - 26	Time Duration of 10th Step Speed	Unit: 1 or 0.1sec (See Pr.05-32)
05 - 27	Time Duration of 11th Step Speed	Unit: 1 or 0.1sec (See Pr.05-32)
05 - 28	Time Duration of 12th Step Speed	Unit: 1 or 0.1sec (See Pr.05-32)
05 - 29	Time Duration of 13th Step Speed	Unit: 1 or 0.1sec (See Pr.05-32)
05 - 30	Time Duration of 14th Step Speed	Unit: 1 or 0.1sec (See Pr.05-32)
05 - 31	Time Duration of 15th Step Speed	Unit: 1 or 0.1sec (See Pr.05-32)

Settings 0.0 to 65500 Factory Setting: 0.0

Pr.05-17 to Pr.05-31 correspond to operation time of each step speed defined by Pr.05-00 to Pr.05-14. The maximum setting of 65500 seconds will be displayed as “t6550•”. If display shows “t6550”, it means 6550 seconds.

If a parameter is set to “00” (0 sec), the corresponding step will be skipped. This is commonly used to reduce the number of program steps.

05 - 32 Time Unit Settings

Factory Setting: 00

Settings	00	1 sec
	01	0.1 sec

This parameter sets the time unit for Pr.05-17~Pr.05-31.

05 - 33 The Amplitude of Wobble Vibration

Settings 0.00 to 400.00 Hz Factory Setting: 0.00

05 - 34 Wobble Skip Frequency

Settings 0.00 to 400.00 Hz Factory Setting: 0.00

The frequency change will be as shown in the following diagram. These two parameters are specific for textile machinery.

- Frequency of Δ top point F_{up}= master frequency F + Pr.05-33 + Pr.05-34.
- Frequency of Δ down point F_{down}= master frequency F – Pr.05-33 – Pr.05-34.

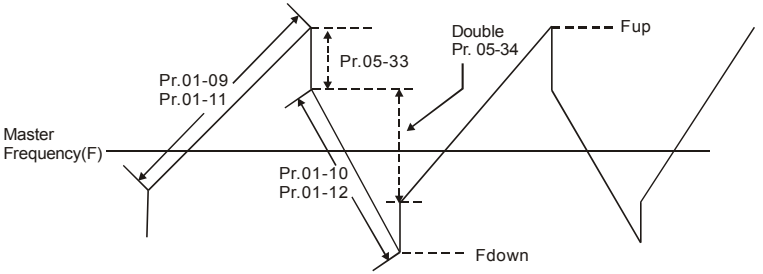

Group 6: Protection Parameters

06 - 00	Over-Voltage Stall Prevention		Unit: 0.1
Settings	230V series	0.1 to 255.0V	Factory Setting: 390.0
	460V series	0.1 to 510.0V	Factory Setting: 780.0
	575V series	0.1 to 1025.0V	Factory Setting: 975.0
	00	Disable Over-voltage Stall Prevention (with brake unit or brake resistor)	

- During deceleration, the DC bus voltage may exceed its Maximum Allowable Value due to motor regeneration. When this function is enabled, the AC motor drive will not decelerate further and keep the output frequency constant until the voltage drops below the preset value again.
- Over-Voltage Stall Prevention must be disabled (Pr.06-00=00) when a brake unit or brake resistor is used.

NOTE

With moderate inertia load, over-voltage stall prevention will not occur and the real deceleration time will be equal to the setting of deceleration time. The AC drive will automatically extend the deceleration time with high inertia loads. If the deceleration time is critical for the application, a brake resistor or brake unit should be used.

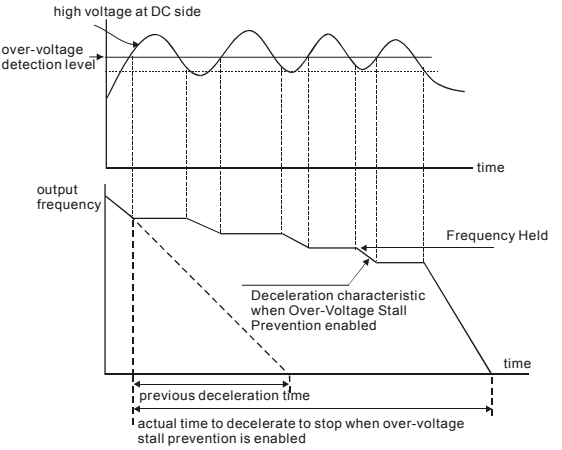

06 - 01	Over-Current Stall Prevention during Acceleration	Unit: 1
	Settings 20 to 250%	Factory Setting: 170

A setting of 100% is equal to the Rated Output Current of the drive.

During acceleration, the AC drive output current may increase abruptly and exceed the value specified by Pr.06-01 due to rapid acceleration or excessive load on the motor. When this function is enabled, the AC drive will stop accelerating and keep the output frequency constant until the current drops below the maximum value.

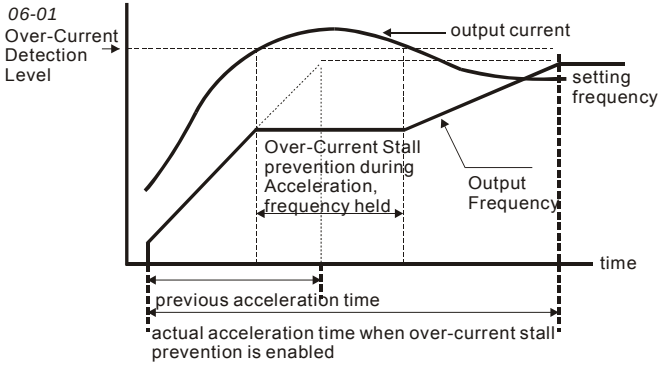

06 - 02	Over-current Stall Prevention during Operation	Unit: 1
	Settings 20 to 250%	Factory Setting: 170

If the output current exceeds the setting specified in Pr.06-02 when the drive is operating, the drive will decrease its output frequency to prevent the motor stall. If the output current is lower than the setting specified in Pr.06-02, the drive will accelerate again to catch up with the set frequency command value.

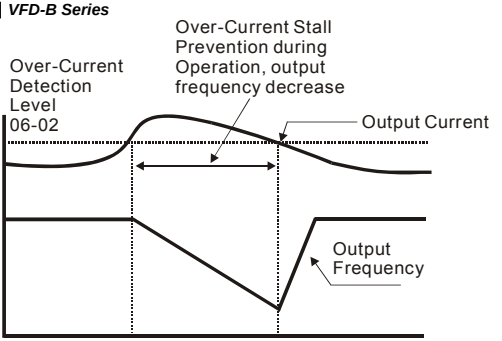

over-current stall prevention during operation

06 - 03	Over-Torque Detection Mode (OL2)	
		Factory Setting: 00
Settings	00	Over-Torque detection disabled.
	01	Over-Torque detection enabled during constant speed operation. After over-torque is detected, keep running until OL1 or OL occurs.
	02	Over-Torque detection enabled during constant speed operation. After over-torque is detected, stop running.
	03	Over-Torque detection enabled during acceleration. After over-torque is detected, keep running until OL1 or OL occurs.
	04	Over-Torque detection enabled during acceleration. After over-torque is detected, stop running.

This parameter determines the operation mode of the drive after the over-torque (OL2) is detected via the following method: if the output current exceeds the over-torque detection level (Pr.06-04) longer than the setting of Pr.06-05 Over-Torque Detection Time, the warning message “OL2” is displayed. If a Multi-Functional Output Terminal is to over-torque detection (Pr.03-00~03-03=04), the output is on. Please refer to Pr.03-00~03-03 for details.

06 - 04	Over-Torque Detection Level (OL2)	Unit: 1
Settings	10 to 200%	Factory Setting: 150

This setting is proportional to the Rated Output Current of the drive.

06 - 05	Over-Torque Detection Time (OL2)	Unit: 0.1
Settings	0.1 to 60.0 sec	Factory Setting: 0.1

This parameter sets the time for how long over-torque must be detected before “OL2” is displayed.

06 - 06	Electronic Thermal Overload Relay Selection (OL1)	
		Factory Setting: 02
Settings	00	Operate with a Standard Motor (self-cooled by fan)
	01	Operate with a Special Motor (forced external cooling)
	02	Operation disabled

This function is used to protect the motor from overloading or overheating.

06 - 07	Electronic Thermal Characteristic	Unit: 1
Settings	30 to 600 sec	Factory Setting: 60

The parameter determines the time required for activating the I2t electronic thermal protection function. The graph below shows I2t curves for 150% output power for 1 minute.

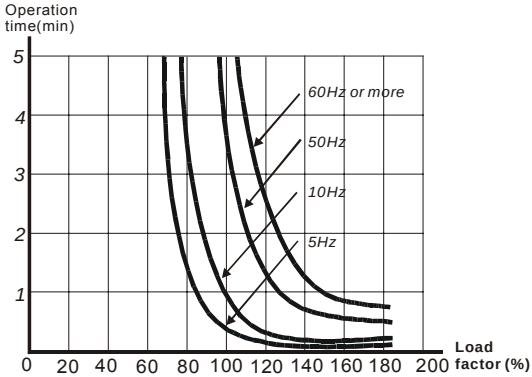

06 - 08	Present Fault Record
06 - 09	Second Most Recent Fault Record
06 - 10	Third Most Recent Fault Record
06 - 11	Fourth Recent Fault Record

Factory Setting: 00

Readings	00	No fault
	01	Over-current (oc)
	02	Over-voltage (ov)
	03	Overheat (oH)
	04	Overload (oL)
	05	Overload1 (oL1)
	06	External fault (EF)

07	IGBT protection (occ)
08	CPU failure (cF3)
09	Hardware protection failure (HPF)
10	Current exceeds 2 times rated current during accel.(ocA)
11	Current exceeds 2 times rated current during decel.(ocd)
12	Current exceeds 2 times rated current during steady state operation (ocn)
13	Ground fault (GFF)
14	Reserved
15	CPU READ failure (CF1)
16	CPU WRITE failure (CF2)
17	Reserved
18	Motor over load (oL2)
19	Auto accel/decel failure (CFA)
20	Software/password protection (codE)
21	Emergency stop (EF1)
22	Phase-Loss (PHL)
23	Preliminary count value attained, EF active (cEF)
24	Under-current (Lc)
25	Analog feedback signal error (AnLEr)
26	PG feedback signal error (PGErr)

In Pr.06-08 to Pr.06-11 the four most recent faults that occurred, are stored. After removing the cause of the fault, use the reset command to reset the drive.

06 - 12	Under-Current Detection Level		Unit: 1
	Settings	00 ~ 100%	Factory Setting: 00
		00 Disabled	
06 - 13	Under-Current Detection Time		Unit: 0.1
	Settings	0.1~ 3600.0 sec	Factory Setting: 10.0
06 - 14	Under-Current Detection Mode		
			Factory Setting: 00
	Settings	00 Warn and keep operating	
		01 Warn and ramp to stop	
		02 Warn and coast to stop	
		03 Warn, after coast to stop, restart (delay 06-15 setting time)	

06 - 15	Under-Current Detection Restart Delay Time	Unit: 1
	Settings 1~600 min	Factory Setting: 10

🕮 If output current is lower than the setting Pr.06-12 for a time that exceeds Pr.06-13 setting during operation, the AC drive will warn per Pr.06-14 setting. If Pr.06-14 is set to 03, the AC drive will restart after the delay time set by Pr.06-15 is up.

06 - 16	User-Defined Low-Voltage Detection Level (Lv)	Unit: 1
	Settings 00 Disabled	
	230V series: 220 ~ 300VDC	Factory Setting: 00
	460V series: 440 ~ 600VDC	Factory Setting: 00
	575V series: 520 ~ 780VDC	Factory Setting: 00
06 - 17	User-Defined Low-Voltage Detection Time	Unit: 0.1
	Settings 0.1~ 3600.0 sec	Factory Setting: 0.5

🕮 When the DC BUS voltage is lower than the setting of Pr.06-16 for a time exceeding the setting of Pr.06-17, the AC motor drive will output a signal when Pr.03-00 ~ Pr.03-03 is set to 28.

06 - 18	Reserved

Group 7: Motor Parameters

07 - 00	⌅ Motor Rated Current	Unit: 1
	Settings 30 to 120%	Factory Setting: 100

Use the following formula to calculate the percentage value entered in this parameter:

(Motor Current / AC Drive Current) x 100%

with Motor Current=Motor rated current in A on type shield

AC Drive Current=Rated current of AC drive in A (see Pr.00-01)

Pr.07-00 and Pr.07-01 must be set if the drive is programmed to operate in Vector Control mode (Pr.0-09 = 2 or 3). They also must be set if the "Electronic Thermal Overload Relay" (Pr.06-06) or "Slip Compensation" functions are selected.

07 - 01	⌅ Motor No-load Current	Unit: 1
	Settings 01 to 90%	Factory Setting: 40

The rated current of the AC drive is regarded as 100%. The setting of the Motor no-load current will affect the slip compensation.

The setting value must be less than Pr.07-00 (Motor Rated Current).

07 - 02	⌅ Torque Compensation	Unit: 0.1
	Settings 0.0 to 10.0	Factory Setting: 0.0

This parameter may be set so that the AC drive will increase its voltage output to obtain a higher torque. Only to be used for V/f control mode.

Too high torque compensation can overheat the motor.

07 - 03	⌅ Slip Compensation (Used without PG)	Unit: 0.01
	Settings 0.00 to 3.00	Factory Setting: 0.00

While driving an asynchronous motor, increasing the load on the AC motor drive will cause an increase in slip and decrease in speed. This parameter may be used to compensate the slip by increasing the output frequency. When the output current of the AC motor drive is bigger than the motor no-load current (Pr.07-01), the AC drive will adjust its output frequency according to this parameter.

07 - 04	Number of Motor Poles	Unit: 2
	Settings 02 to 10	Factory Setting: 04

This parameter sets the number of motor poles (must be an even number).

07 - 05	Motor Parameters Auto Tuning	Unit: 1
		Factory Setting: 00
Settings	00	Disable
	01	Auto Tuning R1 (motor doesn't run)
	02	Auto Tuning R1 + No-load Test (with running motor)

Start Auto Tuning by pressing RUN key after this parameter is set to 01 or 02.

When set to 01, it will only auto detect R1 value and Pr.07-01 must be input manually. When set to 02, the AC motor drive should be unloaded and the values of Pr.07-01 and Pr.07-06 will be set automatically.

The steps to AUTO-Tuning are:

1. Make sure that all the parameters are set to factory settings and the motor wiring is correct.
2. Make sure the motor has no-load before executing auto-tuning and the shaft is not connected to any belt or gear motor.
3. Fill in Pr.01-01, Pr.01-02, Pr.07-00, Pr.07-04 and Pr.07-08 with correct values.
4. After Pr.07-05 is set to 2, the AC motor drive will execute auto-tuning immediately after receiving a "RUN" command. (Note: The motor will run!). The total auto tune time will be 15 seconds + Pr.01-09 + Pr.01-10. Higher power drives need longer Accel/|Decel time (factory setting is recommmeded). After executing, Pr.07-05 is set to 0.
5. After executing, please check if there are values filled in Pr.07-01 and Pr.07-06. If not, please press RUN key after setting Pr.07-05 again.
6. Then you can set Pr.00-09 to 02/03 and set other parameters according to your application requirement.

NOTE

1. In vector control mode it is not recommended to have motors run in parallel.
2. It is not recommended to use vector control mode if motor rated power exceeds the rated power of the AC motor drive.

07 - 06	Motor Line-to-line Resistance R1	Unit: 1
Settings	00 to 65535 mΩ	Factory Setting: 00

📖 The motor auto tune procedure will set this parameter. The user may also set this parameter without using Pr.07-05.

07 - 07	Reserved

07 - 08	Motor Rated Slip	Unit: 0.01
Settings	0.00 to 20.00Hz	Factory Setting: 3.00

📖 Refer to the rated rpm and the number of poles on the nameplate of the motor and use the following equation to calculate the rated slip.

Rated Slip (Hz) = F_{base} (Pr.01-01 base frequency) – (rated rpm x motor pole 120)

📖 This parameter is valid only in vector mode.

07 - 09	Slip Compensation Limit	Unit: 1
Settings	00 to 250%	Factory Setting: 200

📖 This parameter sets the upper limit of the compensation frequency (the percentage of Pr.07-08).

Example: when Pr.07-08=5Hz and Pr.07-09=150%, the upper limit of the compensation frequency is 7.5Hz. Therefore, for a 50Hz motor, the max. output is 57.5Hz.

07 - 10	Reserved
07 - 11	Reserved

07 - 12	Torque Compensation Time Constant	Unit: 0.01
Settings	0.01 ~10.00 sec	Factory Setting: 0.05
07 - 13	Slip Compensation Time Constant	Unit: 0.01
Settings	0.05 ~10.00 sec	Factory Setting: 0.10

📖 Setting Pr.07-12 and Pr.07-13 changes the response time for the compensation.

📖 When Pr.07-12 and Pr.07-13 are set to 10.00 sec, its response time for the compensation will be the longest. But if the settings are too short, unstable system may occur.

07 - 14	Accumulative Motor Operation Time (Min.)	Unit: 1
Settings	00 ~1439	Factory Setting: 00
07 - 15	Accumulative Motor Operation Time (Day)	Unit: 1
Settings	00 ~65535	Factory Setting: 00

🕮 Pr.07-14 and Pr.07-15 are used to record the motor operation time. They can be cleared by setting to 00 and time is less than 60 seconds is not recorded.

Group 8: Special Parameters

08 - 00	DC Braking Current Level	Unit: 1
Settings	00 to 100%	Factory Setting: 00

This parameter sets the level of DC Braking Current output to the motor during start-up and stopping. When setting DC Braking Current, the Rated Current (Pr.00-01) is regarded as 100%. It is recommended to start with a low DC Braking Current Level and then increase until proper holding torque has been attained.

08 - 01	DC Braking Time during Start-up	Unit: 0.1
Settings	0.0 to 60.0 sec	Factory Setting: 0.0

This parameter determines the duration of the DC Braking current after a RUN command. When the time has elapsed, the AC motor drive will start accelerating from the Minimum Frequency (Pr.01-05).

08 - 02	DC Braking Time during Stopping	Unit: 0.1
Settings	0.0 to 60.0 sec	Factory Setting: 0.0

This parameter determines the duration of the DC Braking current during stopping. If stopping with DC Braking is desired, Pr.02-02 Stop Method must be set to 00 or 02 for RAMP stop.

08 - 03	Start-Point for DC Braking	Unit: 0.01
Settings	0.00 to 400.00Hz	Factory Setting: 0.00

This parameter determines the frequency when DC Braking will begin during deceleration.

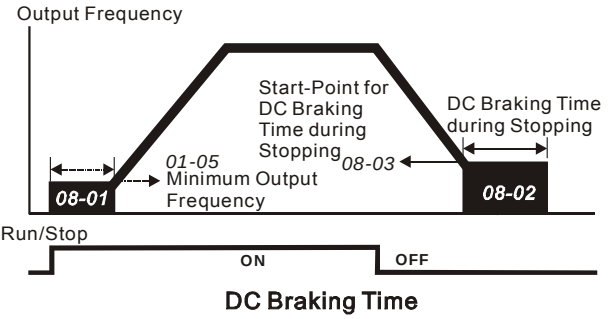

DC Braking Time

- DC Braking during Start-up is used for loads that may move before the AC drive starts, such as fans and pumps. Under such circumstances, DC Braking can be used to hold the load in position before setting it in motion.
- DC Braking during stopping is used to shorten the stopping time and also to hold a stopped load in position. For high inertia loads, a dynamic braking resistor may also be needed for fast decelerations.

08 - 04	Momentary Power Loss Operation Selection	
		Factory Setting: 00
Settings	00	Operation stops after momentary power loss.
	01	Operation continues after momentary power loss, speed search starts with the Master Frequency reference value.
	02	Operation continues after momentary power loss, speed search starts with the minimum frequency.

- This parameter determines the operation mode when the AC motor drive restarts from a momentary power loss.
- When using a PG card with PG (encoder), speed search will begin at the actual PG (encoder) feedback speed and settings 01 and 02 will be invalid.

08 - 05	Maximum Allowable Power Loss Time	Unit: 0.1
Settings	0.1 to 5.0 sec	Factory Setting: 2.0

- If the duration of a power loss is less than this parameter setting, the AC motor drive will resume operation. If it exceeds the Maximum Allowable Power Loss Time, the AC motor drive output is then turned off (coast stop).
- The selected operation after power loss in Pr.08-04 is only executed when the maximum allowable power loss time is ≤5 seconds and the AC motor drive displays “Lu”.
  But if the AC motor drive is powered off due to overload, even if the maximum allowable power loss time is ≤5 seconds, the operation mode as set in Pr.08-04 is not executed. In that case it starts up normally.

08 - 06	Baseblock Time for Speed Search (BB)	Unit: 0.1
Settings	0.1 to 5.0 sec	Factory Setting: 0.5

- When momentary power loss is detected, the AC drive will block its output and then wait for a specified period of time (determined by Pr.08-06, called Base-Block Time) before resuming operation. This parameter should be set at a value to ensure that any residual regeneration voltage from the motor on the output has disappeared before the drive is activated again.
- This parameter also determines the waiting time before resuming operation after External Baseblock and Auto Restart after Fault (Pr.08-14).
- When using a PG card with PG (encoder), speed search will begin at the actual PG (encoder) feedback speed and settings 01 and 02 will be invalid.

08 - 07	Current Limit for Speed Search	Unit: 1
	Settings 30 to 200%	Factory Setting: 150

- Following a momentary power loss, the AC motor drive will start its speed search operation only if the output current is greater than the value set by Pr.8-07. When the output current is less than the value of Pr.8-07, the AC motor drive output frequency is at “speed synchronization point”. The drive will start to accelerate or decelerate back to the operating frequency at which it was running prior to the power loss.

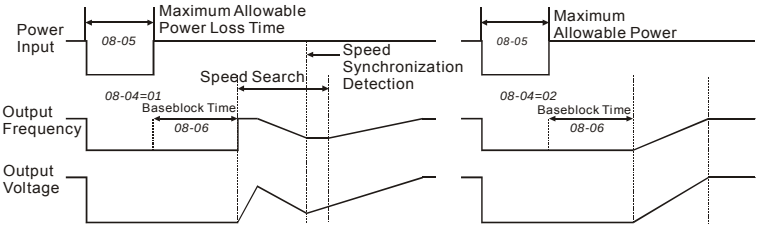

Momentary Power Loss Operation

08 - 08	Skip Frequency 1 Upper Limit	Unit: 0.01
08 - 09	Skip Frequency 1 Lower Limit	Unit: 0.01
08 - 10	Skip Frequency 2 Upper Limit	Unit: 0.01
08 - 11	Skip Frequency 2 Lower Limit	Unit: 0.01
08 - 12	Skip Frequency 3 Upper Limit	Unit: 0.01
08 - 13	Skip Frequency 3 Lower Limit	Unit: 0.01
	Settings 0.00 to 400.00Hz	Factory Setting: 0.00

These parameters set the Skip Frequencies. It will cause the AC motor drive never to remain within these frequency ranges with continuous frequency output.

These six parameters should be set as follows Pr.08-08 ≥ Pr.08-09 ≥ Pr.08-10 ≥ Pr.08-11 ≥ Pr.08-12 ≥ Pr.08-13.

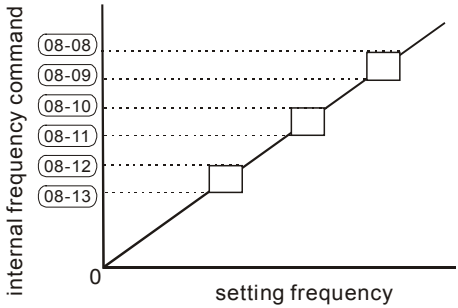

08 - 14	Auto Restart After Fault	Unit: 1
Settings	00 to 10	Factory Setting: 00
	00 Disable	

Only after an over-current OC or over-voltage OV fault occurs, the AC motor drive can be reset/restarted automatically up to 10 times.

Setting this parameter to 0 will disable the reset/restart operation after any fault has occurred. When enabled, the AC motor drive will restart with speed search, which starts at the frequency before the fault. To set the waiting time before restart after a fault, please set Pr. 08-06 Base Block Time for Speed Search.

08 - 21	Auto Reset Time at Restart after Fault	Unit: 1
Settings	00 to 60000 sec	Factory Setting: 600

This parameter should be used in conjunction with Pr.08-14.

For example: If Pr.08-14 is set to 10 and Pr.08-21 is set to 600s (10 min), and if there is no fault for over 600 seconds from the restart for the previous fault, the auto reset times for restart after fault will be reset to 10.

08 - 15 Automatic Energy-saving

Factory Setting: 00

Settings	00	Energy-saving operation disabled
	01	Energy-saving operation enabled

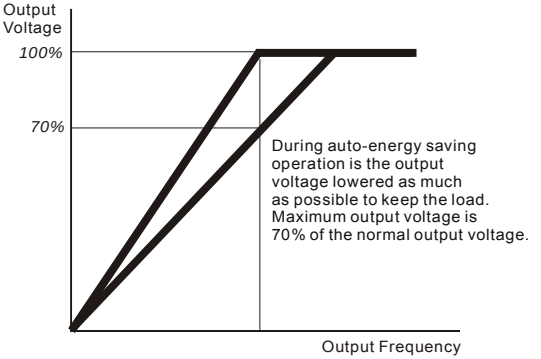

08 - 16 Automatic Voltage Regulation (AVR)

Factory Setting: 00

Settings	00	AVR function enabled
	01	AVR function disabled
	02	AVR function disabled for deceleration

📖 The rated voltage of the motor is usually AC230V/200V 50Hz/60Hz and the input voltage of the AC motor drive may vary between 180V to 264 VAC 50Hz/60Hz. Therefore, when the AC motor drive is used without AVR function, the output voltage will be the same as the input voltage. When the motor runs at voltages exceeding the rated voltage with 12% - 20%, its lifetime will be shorter and it can be damaged due to higher temperature, failing insulation and unstable torque output.

📖 AVR function automatically regulates the AC motor drive output voltage to the Maximum Output Voltage (Pr.01-02). For instance, if Pr.01-02 is set at 200 VAC and the input voltage is at 200V to 264VAC, then the Maximum Output Voltage will automatically be reduced to a maximum of 200 VAC.

📖 When motor stops with deceleration, it will shorten deceleration time. When setting this parameter to 02 with auto acceleration/deceleration, it will offer a quicker deceleration.

08 - 17	Software Braking Level (the Action Level of the Braking Resistor)	Unit: 1
Settings	230V series: 370 to 430V	Factory Setting: 380
	460V series: 740 to 860V	Factory Setting: 760
	575V series: 925 to 1075V	Factory Setting: 950

This parameter sets the DC-bus voltage at which the brake chopper is activated.

This parameter will be invalid for models above 15kW/20hp for which VFDB brake unit must be used.

08 - 18	Base Block Speed Search	
		Factory Setting: 00
Settings	00	Speed search starts with last frequency command
	01	Speed search starts with minimum output frequency (Pr.01-05)

This parameter determines the AC motor drive restart method after External Base Block is enabled.

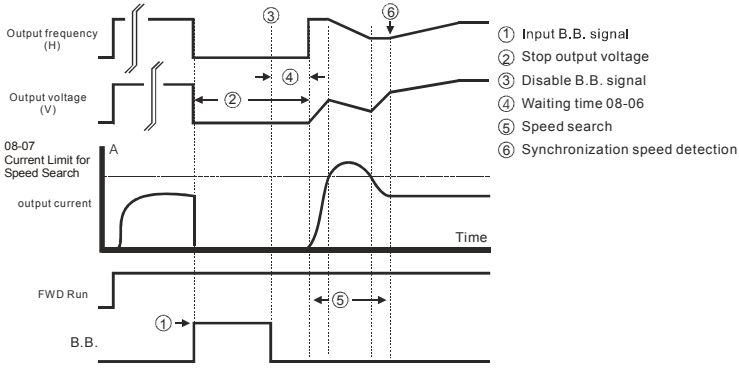

Fig 1: B.B. Speed Search with Last Output Frequency Downward Timing Chart

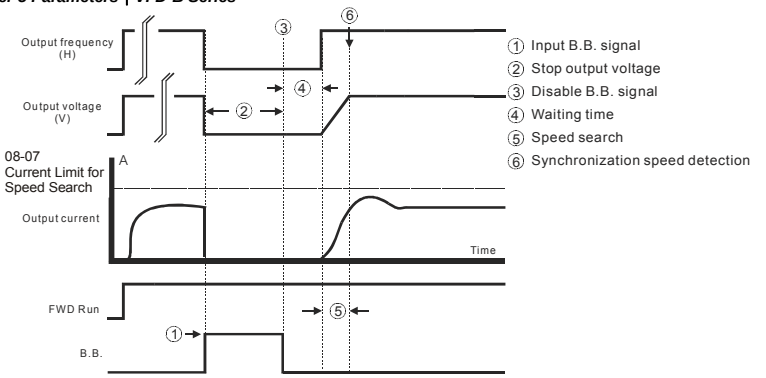

Fig 2: B.B. Speed Search with Last Output Frequency Downward Timing Chart

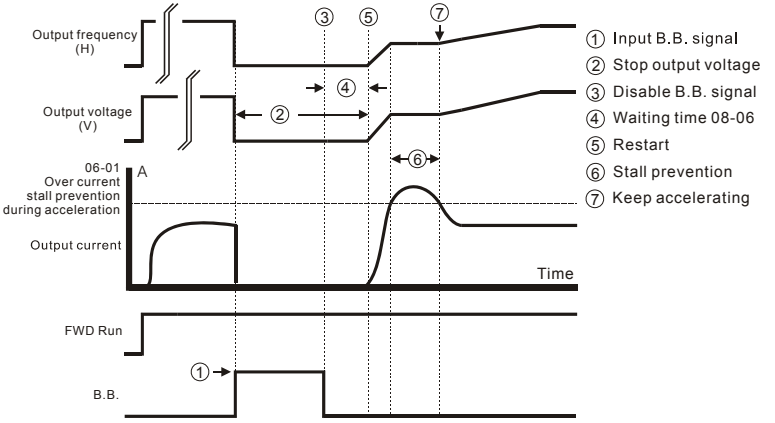

Fig 3: B.B. Speed Search with Minimum Output Frequency Upward Timing Chart

08 - 19	Speed Search during Start-up	
		Factory Setting: 00
Settings	00	Speed search disable
	01	Speed search enable

This parameter is used for starting and stopping a motor with high inertia. A motor with high inertia will take a long time to stop completely. By setting this parameter, the user does not need to wait for the motor to come to a complete stop before restarting the AC motor drive. If a PG card and encoder is used on the drive and motor, then the speed search will start from the speed that is detected by the encoder and accelerate quickly to the commanded frequency. Pr.08-04 and Pr.08-06 will be disabled when using this parameter with PG feedback control.

CAUTION!

Please make sure Pr.07-04, Pr.10-10, and Pr.10-11 are set correctly. An incorrect setting may cause the motor to exceed its speed limit and permanent damage to the motor and machine can occur.

08 - 20	✓Speed Search Frequency during Start-up	
		Factory Setting: 00
Settings	00	Setting Frequency
	01	Maximum Operation Frequency (01-00)

This parameter determines the start value of the speed search frequency.

08 - 22	✓Compensation Coefficient for Motor Instability	Unit: 1
Settings	00~1000	Factory Setting: 00

The drift current will occur in a specific zone of the motor and it will make motor instable. By using this parameter, it will improve this situation greatly.

The drift current zone of the big horsepower motor is usually in the low frequency area.

It is recommended to set to more than 500.

Group 9: Communication Parameters

There is a built-in RS-485 serial interface, marked RJ-11 near to the control terminals. The pins are defined below:

1: EV
2: GND
3: SG-
4: SG+
5: Reserved
6: Reserved

Each VFD-B AC drive has a pre-assigned communication address specified by Pr.09-00. The RS485 master then controls each AC motor drive according to its communication address.

09 - 00	✓Communication Address	
Settings	01 to 254	Factory Setting: 01

🕮 If the AC motor drive is controlled by RS-485 serial communication, the communication address for this drive must be set via this parameter. And the communication address for each AC motor drive must be different and unique.

09 - 01	✓Transmission Speed	
		Factory Setting: 01
Settings	00	Baud rate 4800 bps (bits / second)
	01	Baud rate 9600 bps
	02	Baud rate 19200 bps
	03	Baud rate 38400 bps

🕮 This parameter is used to set the transmission speed between the RS485 master (PLC, PC, etc.) and AC motor drive.

09 - 02	✓Transmission Fault Treatment	
		Factory Setting: 03
Settings	00	Warn and keep operating
	01	Warn and RAMP to stop
	02	Warn and COAST to stop
	03	No warning and keep operating

🕮 This parameter is set to how to react if transmission errors occur.

🕮 See list of error messages below (see section 3.6.)

09 - 03	✓Time-out Detection	Unit: 0.1
Settings	0.0 ~ 60.0 sec	Factory Setting: 0.0
	0.0 Disable	

If Pr.09-03 is not equal to 0.0, Pr.09-02=00~02, and there is no communication on the bus during the Time Out detection period (set by Pr.09-03), "cE10" will be shown on the keypad.

09 - 04	✓Communication Protocol	
		Factory Setting: 00
Settings	00	Modbus ASCII mode, protocol <7,N,2>
	01	Modbus ASCII mode, protocol <7,E,1>
	02	Modbus ASCII mode, protocol <7,O,1>
	03	Modbus RTU mode, protocol <8,N,2>
	04	Modbus RTU mode, protocol <8,E,1>
	05	Modbus RTU mode, protocol <8,O,1>

1. Control by PC or PLC

★A VFD-B can be set up to communicate on Modbus networks using one of the following modes: ASCII (American Standard Code for Information Interchange) or RTU (Remote Terminal Unit). Users can select the desired mode along with the serial port communication protocol in Pr.09-04.

★Code Description:

ASCII mode:

Each 8-bit data is the combination of two ASCII characters. For example, a 1-byte data: 64 Hex, shown as '64' in ASCII, consists of '6' (36Hex) and '4' (34Hex).

Character	'0'	'1'	'2'	'3'	'4'	'5'	'6'	'7'
ASCII code	30H	31H	32H	33H	34H	35H	36H	37H

Character	'8'	'9'	'A'	'B'	'C'	'D'	'E'	'F'
ASCII code	38H	39H	41H	42H	43H	44H	45H	46H

RTU mode:

Each 8-bit data is the combination of two 4-bit hexadecimal characters. For example, 64 Hex.

2. Data Format

10-bit character frame (For ASCII):

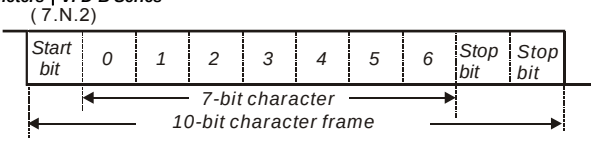

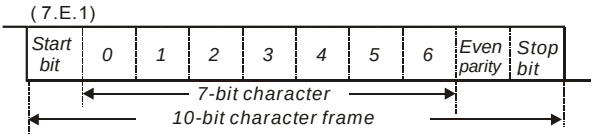

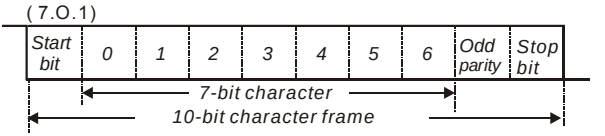

11-bit character frame (For RTU):

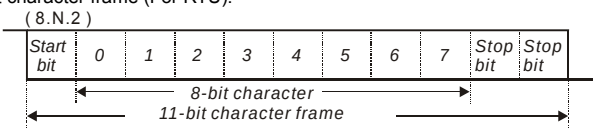

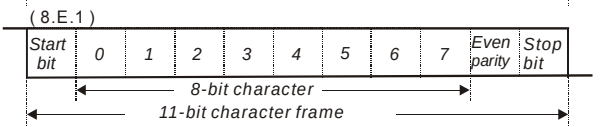

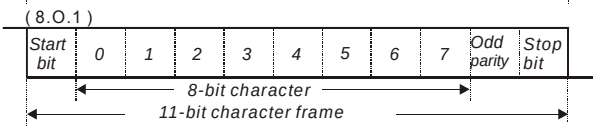

3. Communication Protocol

3.1 Communication Data Frame:

ASCII mode:

STX	Start character ':' (3AH)
Address Hi	Communication address:
Address Lo	8-bit address consists of 2 ASCII codes
Function Hi	Command code:
Function Lo	8-bit command consists of 2 ASCII codes
DATA (n-1) to DATA 0	Contents of data: Nx8-bit data consist of 2n ASCII codes n<=20, maximum of 40 ASCII codes
LRC CHK Hi	LRC check sum:
LRC CHK Lo	8-bit check sum consists of 2 ASCII codes
END Hi	End characters:
END Lo	END1= CR (0DH), END0= LF(0AH)

RTU mode:

START	A silent interval of more than 10 ms
Address	Communication address: 8-bit address
Function	Command code: 8-bit command
DATA (n-1) to DATA 0	Contents of data: n×8-bit d ata, n<=40 (20 x 16-bit data)
CRC CHK Low	CRC check sum: 16-bit check sum consists of 2 8-bit characters
CRC CHK High	
END	A silent interval of more than 10 ms

3.2 Address (Communication Address)

Valid communication addresses are in the range of 0 to 254. A communication address equal to 0, means broadcast to all AC drives (AMD). In this case, the AMD will not reply any message to the master device.

00H: broadcast to all AC drives

01H: AC drive of address 01

0FH: AC drive of address 15

10H: AC drive of address 16

:

FEH: AC drive of address 254

For example, communication to AMD with address 16 decimal (10H):

ASCII mode: Address=’1’,’0’ => ‘1’=31H, ‘0’=30H

RTU mode: Address=10H

3.3 Function (Function code) and DATA (data characters)

The format of data characters depends on the function code.

03H: read data from register

06H: write single register

08H: loop detection

10H: write multiple registers

The available function codes and examples for VFD-B are described as follows:

(1) 03H: multi read, read data from registers.

Example: reading continuous 2 data from register address 2102H, AMD address is 01H.

ASCII mode:

Command message:

STX	':'
Address	'0'
	'1'
Function	'0'
	'3'
Starting data address	'2'
	'1'
	'0'
	'2'
Number of data (count by word)	'0'
	'0'
	'0'
	'2'
LRC Check	'D'
	'7'
END	CR
	LF

Response message:

STX	':'
Address	'0'
	'1'
Function	'0'
	'3'
Number of data (Count by byte)	'0'
	'4'
Content of starting address 2102H	'1'
	'7'
	'7'
	'0'
Content of address 2103H	'0'
	'0'
	'0'
	'0'
LRC Check	'7'
	'1'
END	CR
	LF

RTU mode:

Command message:

Address	01H
Function	03H
Starting data address	21H
	02H
Number of data (count by word)	00H
	02H
CRC CHK Low	6FH
CRC CHK High	F7H

Response message:

Address	01H
Function	03H
Number of data (count by byte)	04H
Content of address 2102H	17H
	70H
Content of address 2103H	00H
	00H
CRC CHK Low	FEH
CRC CHK High	5CH

(2) 06H: single write, write single data to register.

Example: writing data 6000(1770H) to register 0100H. AMD address is 01H.

ASCII mode:

Command message:

STX	':'
Address	'0'
	'1'
Function	'0'
	'6'
Data address	'0'
	'1'
	'0'
	'0'
Data content	'1'
	'7'
	'7'

Response message:

STX	':'
Address	'0'
	'1'
Function	'0'
	'6'
Data address	'0'
	'1'
	'0'
	'0'
Data content	'1'
	'7'
	'7'

Command message:

	'0'
LRC Check	'7'
	'1'
END	CR
	LF

Response message:

	'0'
LRC Check	'7'
	'1'
END	CR
	LF

RTU mode:

Command message:

Address	01H
Function	06H
Data address	01H
	00H
Data content	17H
	70H
CRC CHK Low	86H
CRC CHK High	22H

Response message:

Address	01H
Function	06H
Data address	01H
	00H
Data content	17H
	70H
CRC CHK Low	86H
CRC CHK High	22H

(3) 10H: write multiple registers (write multiple data to registers)

Example: Set the multi-step speed,

Pr.05-00=50.00 (1388H), Pr.05-01=40.00 (0FA0H). AC drive address is 01H.

ASCII Mode:

Command message:

STX	':'
Address 1	'0'
Address 0	'1'
Function 1	'1'
Function 0	'0'
Starting data address	'0'
	'5'
	'0'
	'0'
Number of data (count by word)	'0'
	'0'
	'0'
	'2'
Number of data (count by byte)	'0'
	'4'
The first data content	'1'
	'3'
	'8'
	'8'
The second data content	'0'
	'F'
	'A'
	'0'
LRC Check	'9'
	'A'
END	CR
	LF

Response message:

STX	':'
Address 1	'0'
Address 0	'1'
Function 1	'1'
Function 0	'0'
Starting data address	'0'
	'5'
	'0'
	'0'
Number of data (count by word)	'0'
	'0'
	'0'
	'2'
LRC Check	'E'
	'8'
END	CR
	LF

RTU mode:

Command message:

Address	01H
Function	10H
Starting data address	05H
	00H
Number of data (count by word)	00H’
	02H
Number of data (count by byte)	04
The first data content	13H
	88H
The second data content	0FH
	A0H
CRC Check Low	‘9’
CRC Check High	‘A’

Response message:

Address	01H
Function	10H
Starting data address	05H
	00H
Number of data (count by word)	00H
	02H
CRC Check Low	41H
CRC Check High	04H

3.4 Check sum

ASCII mode:

LRC (Longitudinal Redundancy Check) is calculated by summing up, module 256, the values of the bytes from ADR1 to last data character then calculating the hexadecimal representation of the 2’s-complement negation of the sum.

For example, reading 1 word from address 0401H of the AC drive with address 01H.

STX	‘:’
Address 1	‘0’
Address 0	‘1’
Function 1	‘0’
Function 0	‘3’
Starting data address	‘0’
	‘4’
	‘0’
	‘1’
Number of data	‘0’
	‘0’
	‘0’
	‘1’
LRC Check 1	‘F’
LRC Check 0	‘6’
END 1	CR
END 0	LF

01H+03H+04H+01H+00H+01H=0AH, the 2’s-complement negation of 0AH is **F6**H.

RTU mode:

Address	01H
Function	03H
Starting data address	21H
	02H
Number of data (count by word)	00H
	02H
CRC CHK Low	6FH
CRC CHK High	F7H

CRC (Cyclical Redundancy Check) is calculated by the following steps:

Step 1: Load a 16-bit register (called CRC register) with FFFFH.

Step 2: Exclusive OR the first 8-bit byte of the command message with the low order byte of the 16-bit CRC register, putting the result in the CRC register.

Step 3: Examine the LSB of CRC register.

Step 4: If the LSB of CRC register is 0, shift the CRC register one bit to the right with MSB zero filling, then repeat step 3. If the LSB of CRC register is 1, shift the CRC register one bit to the right with MSB zero filling, Exclusive OR the CRC register with the polynomial value A001H, then repeat step 3.

Step 5: Repeat step 3 and 4 until eight shifts have been performed. When this is done, a complete 8-bit byte will have been processed.

Step 6: Repeat step 2 to 5 for the next 8-bit byte of the command message. Continue doing this until all bytes have been processed. The final contents of the CRC register are the CRC value. When transmitting the CRC value in the message, the upper and lower bytes of the CRC value must be swapped, i.e. the lower order byte will be transmitted first.

The following is an example of CRC generation using C language. The function takes two arguments:

Unsigned char* data ← a pointer to the message buffer

Unsigned char length ← the quantity of bytes in the message buffer

The function returns the CRC value as a type of unsigned integer.

```
Unsigned int crc_chk(unsigned char* data, unsigned char length){
  int j;
  unsigned int reg_crc=0xFFFF;
  while(length--){
    reg_crc ^= *data++;
    for(j=0;j<8;j++){
      if(reg_crc & 0x01){  /* LSB(b0)=1 */
```

```
        reg_crc=(reg_crc>>1) ^ 0xA001;
      }else{
        reg_crc=reg_crc >>1;
      }
    }
  }
 return reg_crc;
}
```

3.5 Address list

The contents of available addresses are shown as below:

Content	Address	Function	
AC drive Parameters	GGnnH	GG means parameter group, nn means parameter number, for example, the address of Pr 4-01 is 0401H. Referencing to chapter 5 for the function of each parameter. When reading parameter by command code 03H, only one parameter can be read at one time.	
Command Write only	2000H	Bit 0-1	00B: No function 01B: Stop 10B: Run 11B: Jog + Run
		Bit 2-3	Reserved
Command Write only	2000H	Bit 4-5	00B: No function 01B: FWD 10B: REV 11B: Change direction
		Bit 6-7	00B: Comm. forced 1st accel/decel 01B: Comm. forced 2nd accel/decel 10B: Comm. forced 3rd accel/decel 11B: Comm. forced 4th accel/decel
		Bit 8-11	Represented 16 step speeds.
		Bit 12	0: No comm. multi step speed or accel/decel time 1: Comm. multi step speed or accel/decel time
		Bit 13-15	Reserved
	2001H	Frequency command	
	2002H	Bit 0	1: EF (external fault) on
		Bit 1	1: Reset
		Bit 2-15	Reserved
Status monitor Read only	2100H	Error code:	
		00: No error occurred	
		01: Over-current (oc)	
		02: Over-voltage (ov)	
		03: Overheat (oH)	
		04: Overload (oL)	
		05: Overload1 (oL1)	

Content	Address	Function	
	2100H	06: External fault (EF)	
		07: IGBT short circuit protection (occ)	
		08: CPU failure (cF3)	
		09: Hardware protection failure (HPF)	
		10: Current exceeds 2 times rated current during accel (ocA)	
		11: Current exceeds 2 times rated current during decel (ocd)	
		12: Current exceeds 2 times rated current during steady state operation (ocn)	
		13: Ground Fault (GFF)	
		14: Low voltage (Lv)	
		15: CPU failure 1 (cF1)	
		16: CPU failure 2 (cF2)	
		17: Base Block	
		18: Overload (oL2)	
		19: Auto accel/decel failure (cFA)	
		20: Software protection enabled (codE)	
		21: EF1 Emergency stop	
		22: PHL (Phase-Loss)	
		23: cEF (Preliminary count value attained, EF active)	
		24: Lc (Under-current)	
		25: AnLEr (Analog feedback signal error)	
		26: PGErr (PG feedback signal error)	
	2101H	Status of AC drive	
		Bit 0-4	LED: 0: light off, 1: light up
			00: RUN LED
			01: STOP LED
			02: JOG LED
			03: FWD LED
			04: REV LED
		Bit 5	0: F light off, 1: F light on
		Bit 6	0: H light off, 1: H light on
		Bit 7	0: “u” light off, 1: “u” light on
		Bit 8	1: Master frequency Controlled by communication interface
		Bit 9	1: Master frequency controlled by analog signal
		Bit 10	1: Operation command controlled by communication interface
		Bit 11	1: Parameters have been locked
		Bit 12	0: AC drive stops, 1: AC drive operates
		Bit 13	1: Jog command
		Bit 14-15	Reserved
	2102H	Frequency command (F)	
	2103H	Output frequency (H)	
	2104H	Output current (AXXX.X)	
	2105H	DC-BUS Voltage (UXXX.X)	
	2106H	Output voltage (EXXX.X)	
	2107H	Step number of Multi-Step Speed Operation	
	2108H	Step number of PLC operation	
	2109H	Content of external TRIGGER	
	210AH	Power factor angle	
	210BH	Estimated torque ratio (XXX.X)	

Content	Address	Function
	210CH	Motor speed (rpm)
	210DH	PG pulse (low word) /unit time (Pr.10-15)
	210EH	PG pulse (high word) /unit time (Pr.10-15)
	210FH	Output power (KW)
	2110H	Reserved
	2200H	Feedback Signal (XXX.XX %)
	2201H	User-defined (Low word)
	2202H	User-defined (High word)
	2203H	AVI analog input (XXX.XX %)
	2204H	ACI analog input (XXX.XX %)
	2205H	AUI analog input (XXX.XX %)
	2206H	Display temperature of heatsink (°C)

3.6 Exception response:

The AC motor drive is expected to return a normal response after receiving command messages from the master device. The following depicts the conditions when no normal response is replied to the master device.

The AC motor drive does not receive the messages due to a communication error; thus, the AC motor drive has no response. The master device will eventually process a timeout condition.

The AC motor drive receives the messages without a communication error, but cannot handle them. An exception response will be returned to the master device and an error message “CExx” will be displayed on the keypad of AC motor drive. The xx of “CExx” is a decimal code equal to the exception code that is described below.

In the exception response, the most significant bit of the original command code is set to 1, and an exception code which explains the condition that caused the exception is returned.

Example of an exception response of command code 06H and exception code 02H:

ASCII mode:

STX	‘:’
Address Low	‘0’
Address High	‘1’
Function Low	‘8’
Function High	‘6’
Exception code	‘0’
	‘2’
LRC CHK Low	‘7’
LRC CHK High	‘7’
END 1	CR
END 0	LF

RTU mode:

Address	01H
Function	86H
Exception code	02H
CRC CHK Low	C3H
CRC CHK High	A1H

The explanation of exception codes:

Exception code	Explanation
01	Illegal function code: The function code received in the command message is not available for the AC motor drive.
02	Illegal data address: The data address received in the command message is not available for the AC motor drive.
03	Illegal data value: The data value received in the command message is not available for the AC drive.
04	Slave device failure: The AC motor drive is unable to perform the requested action.
10	Communication time-out: If Pr.09-03 is not equal to 0.0, Pr.09-02=00~02, and there is no communication on the bus during the Time Out detection period (set by Pr.09-03), “cE10” will be shown on the keypad.

3.7 Communication program of PC:

The following is a simple example of how to write a communication program for Modbus ASCII mode on a PC by C language.

```
#include<stdio.h>
#include<dos.h>
#include<conio.h>
#include<process.h>
#define PORT 0x03F8  /* the address of COM1 */
/* the address offset value relative to COM1 */
#define THR  0x0000
#define RDR  0x0000
#define BRDL  0x0000
#define IER  0x0001
#define BRDH 0x0001
#define LCR  0x0003
#define MCR  0x0004
#define LSR  0x0005
#define MSR  0x0006
unsigned char rdat[60];
/* read 2 data from address 2102H of AC drive with address 1 */
unsigned char tdat[60]={':','0','1','0','3','2','1','0','2', '0','0','0','2','D','7','\r','\n'};
void main(){
int i;
outportb(PORT+MCR,0x08);            /* interrupt enable */
```

```
outportb(PORT+IER,0x01);            /* interrupt as data in */
outportb(PORT+LCR,(inportb(PORT+LCR) | 0x80));
/* the BRDL/BRDH can be access as LCR.b7==1 */
outportb(PORT+BRDL,12);             /* set baudrate=9600, 12=115200/9600*/
outportb(PORT+BRDH,0x00);
outportb(PORT+LCR,0x06);            /* set protocol, <7,N,2>=06H, <7,E,1>=1AH,
<7,O,1>=0AH, <8,N,2>=07H, <8,E,1>=1BH, <8,O,1>=0BH   */
for(i=0;i<=16;i++){
while(!(inportb(PORT+LSR) & 0x20)); /* wait until THR empty */
outportb(PORT+THR,tdat[i]);       /* send data to THR */    }
i=0;
while(!kbhit()){
if(inportb(PORT+LSR) & 0x01){ /* b0==1, read data ready */
rdat[i++]=inportb(PORT+RDR); /* read data form RDR */
}    }    }
```

09 - 05	Reserved
09 - 06	Reserved

09 - 07	⸙ Response Delay Time	Unit: 0.5
Settings	00 ~ 200 msec	Factory Setting: 00

📖 This parameter is the response delay time after AC drive receives communication command as shown in the following.

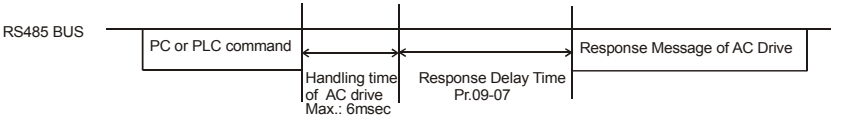

* This parameter is only for firmware version 4.01 and higher.

Group 10: PID Control

10 - 00	Input Terminal for PID Feedback	
		Factory Setting: 00
Settings	00	Inhibit PID operation: external terminals AVI, ACI may be used for frequency command if required (Pr.02-00).
	01	**Negative** PID feedback from external terminal AVI (0 ~ +10VDC).
	02	**Negative** PID feedback from external terminal ACI (4 ~ 20mA).
	03	**Positive** PID feedback from external terminal AVI (0 ~ +10VDC).
	04	**Positive** PID feedback from external terminal ACI (4 ~ 20mA).

- Note that the measured variable (feedback) controls the output frequency (Hz). Select input terminal accordingly. Make sure this parameter setting does not conflict with the setting for Pr.02-00 (Master Frequency).
- When Pr.02-00 is set to 01 or 02, the set point (Master Frequency) for PID control is obtained from the AVI/ACI external terminal (0 to +10V or 4-20mA) or from multi-step speed. When Pr.02-00 is set to 00, the set point is obtained from the keypad.
- Negative feedback means: +target value – feedback

  Positive feedback means: -target value + feedback.

10 - 01	Gain Over the PID Detection Value	Unit: 0.01
Settings	0.00 to 10.00	Factory Setting: 1.00

- This is the gain adjustment over the feedback detection value. Refer to PID control block diagram in Pr.10-06 for detail.

10 - 02	✓Proportional Gain (P)	Unit: 0.01
Settings	0.0 to 10.0	Factory Setting: 1.0

- This parameter specifies proportional control and associated gain (P). If the other two gains (I and D) are set to zero, proportional control is the only one effective. With 10% deviation (error) and P=1, the output will be P x10% x Master Frequency.

NOTE

The parameter can be set during operation for easy tuning.

10 - 03	⸙ Integral Gain (I)	Unit: 0.01
Settings	0.00 to 100.00 sec 0.00 Disable	Factory Setting: 1.00

This parameter specifies integral control (continual sum of the deviation) and associated gain (I). When the integral gain is set to 1 and the deviation is fixed, the output is equal to the input (deviation) once the integral time setting is attained.

NOTE

The parameter can be set during operation for easy tuning.

10 - 04	⸙ Derivative Control (D)	Unit: 0.01
Settings	0.00 to 1.00 sec	Factory Setting: 0.00

This parameter specifies derivative control (rate of change of the input) and associated gain (D). With this parameter set to 1, the PID output is equal to differential time x (present deviation – previous deviation). It increases the response speed but it may cause over-compensation.

NOTE

The parameter can be set during operation for easy tuning.

10 - 05	Upper Bound for Integral Control	Unit: 1
Settings	00 to 100 %	Factory Setting: 100

This parameter defines an upper bound or limit for the integral gain (I) and therefore limits the Master Frequency.

The formula is: Integral upper bound = Maximum Output Frequency (Pr.01-00) x (Pr.10-05). This parameter can limit the Maximum Output Frequency.

10 - 06	Primary Delay Filter Time	Unit: 0.1
Settings	0.0 to 2.5 sec	Factory Setting: 0.0

To avoid amplification of measurement noise in the controller output, a derivative digital filter is inserted. This filter helps to dampen oscillations.

The complete PID diagram is in the following:

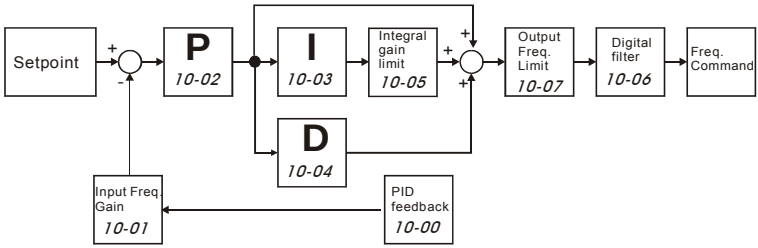

10 - 07	PID Output Frequency Limit	Unit: 1
Settings	00 to 110 %	Factory Setting: 100

This parameter defines the percentage of output frequency limit during the PID control. The formula is Output Frequency Limit = Maximum Output Frequency (Pr.01-00) X Pr.10-07 %. This parameter will limit the Maximum Output Frequency. An overall limit for the output frequency can be set in Pr.01-07.

10 - 08	Feedback Signal Detection Time	Unit: 0.1
Settings	0.0 to d 3600.0 sec	Factory Setting: 60.0

This parameter defines the time during which the PID feedback must be abnormal before a warning (see Pr.10-09) is given. It also can be modified according to the system feedback signal time.

If this parameter is set to 0.0, the system would not detect any abnormality signal.

10 - 09	✓Treatment of the Erroneous Feedback Signals (for PID and PG feedback error)
	Factory Setting: 00
Settings	00 Warning and keep operating
	01 Warning and RAMP to stop
	02 Warning and COAST to stop

AC motor drive action when the feedback signals (analog PID feedback or PG (encoder) feedback) are abnormal acc. to Pr.10-16.

10 - 16	Deviation Range of PID Feedback Signal Error	Unit: 0.01
Settings	0.00~100.00%	Factory Setting: 100.00

The base is Pr.01-00. When in PID feedback control, if | Source of PID reference target – feedback | > Pr.10-16 and exceeds Pr.10-08 detection time, the AC drive will operate according to Pr.10-09.

10 - 10	PG Pulse Range	Unit: 1
Settings	1 ~ 40000 (Max=20000 for 2-pole motor)	Factory Setting: 600

A Pulse Generator (PG) or encoder is used as a sensor that provides a feedback signal of the motor speed. This parameter defines the number of pulses for each cycle of the PG control.

For PG or encoder feedback an option PG-card is needed.

10 - 11	PG Input	
		Factory Setting: 00
Settings	00	Disable PG
	01	Single phase
	02	Forward / Counterclockwise rotation
	03	Reverse / Clockwise rotation

The relationship between the motor rotation and PG input is illustrated below:

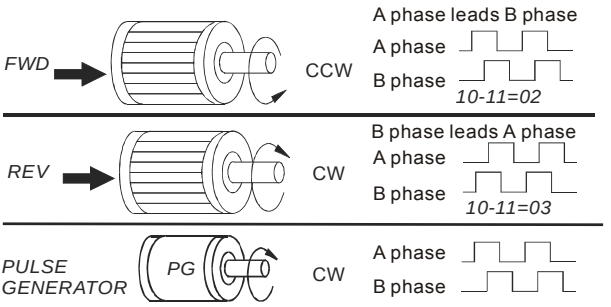

10 - 12	ASR (Auto Speed Regulation) control (with PG only) (P)	Unit: 0.1
Settings	0.0 to 10.0	Factory Setting: 1.0

This parameter specifies Proportional control and associated gain (P), and is used for speed control with PG (encoder) feedback.

NOTE

The parameter can be set during operation for easy tuning.

10 - 13	✓ ASR (Auto Speed Regulation) control (with PG only) (I)	Unit: 0.01
	Settings 0.00 to 100.00 0.00 disable	Factory Setting: 1.00

This parameter specifies Integral control and associated gain (I), and is used for speed control with PG (encoder) feedback.

NOTE

The parameter can be set during operation for easy tuning.

10 - 14	Speed Control Output Frequency Limit	Unit: 0.01
	Settings 0.00 to 100.00 Hz	Factory Setting: 10.00

This parameter limits the amount of correction by the PI control on the output frequency when controlling speed via PG (encoder) feedback. It can limit the maximum output frequency.

10 - 15	Sample time for refreshing the content of 210DH and 210EH	
	Settings 0.01~1.00 seconds	Factory Setting: 0.10

When the signal source of feedback control is PG (encoder) and it needs to read the pulse numbers from communication, this parameter can be used to set the refresh time of two communication addresses (210D and 210E).

Speed Control Diagram

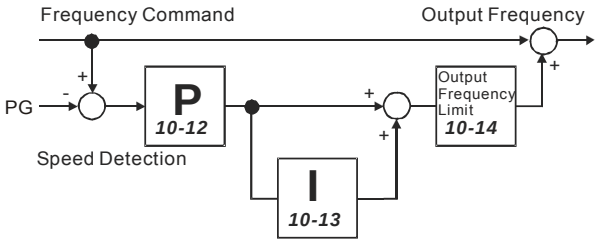

Group 11: Fan and Pump Control Parameters

11 - 00	V/f Curve Selection	
		Factory Setting: 00
Settings	00	V/f curve determined by Pr.01-00 to Pr.01-06.
	01	1.5 power curve
	02	1.7 power curve
	03	Square curve
	04	Cube curve

Confirm the load curve and select the proper V/f curve before use.

The available V/f curves are shown below:

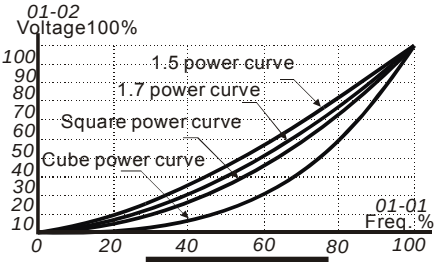

V/F Curve Diagram

11 - 01	Start-up Frequency of the Auxiliary Motor	Unit: 0.01
Settings	0.00 to 400.00 Hz	Factory Setting: 0.00

This parameter serves as a reference for the startup value of the auxiliary motor. If the setting is 0, the auxiliary motor cannot be activated.

11 - 02	Stop Frequency of the Auxiliary Motor	Unit: 0.01
Settings	0.00 to 400.00 Hz	Factory Setting: 0.00

When the output frequency reaches this parameter value, the auxiliary motor will be stopped. There must be a minimum of 5 Hz difference between the start frequency and stop frequency of auxiliary motor. (Pr.11-01-Pr.11-02) > 5 Hz.

11 - 03	Time Delay before Starting the Auxiliary Motor	Unit: 0.1
Settings	0.0 to 3600.0 sec	Factory Setting: 0.0

11 - 04	Time Delay before Stopping the Auxiliary Motor	Unit: 0.1
	Settings 0.0 to 3600.0 sec	Factory Setting: 0.0

- The number of Multi-function Output terminals set to 16, 17, 18 decides the number of auxiliary motors. The maximum is three.
- The start/stop frequency of the auxiliary motor must have a minimum of 5Hz difference.
- The start/stop delay time can prevent the AC motor drive from overloaded during starting/stopping.
- These parameters determine the starting sequence of auxiliary motors.

  The auxiliary motor started first will be stopped first.

  Example: Start sequence: motor 1 -> motor 2 -> motor 3

  Stop sequence: motor 1 -> motor 2 -> motor 3
- The flowchart of auxiliary motor start/stop sequence:

  Pr.11-01 Start-up frequency = 50 Hz, Pr.11-02 Stop frequency = 20 Hz

  Pr.11-03 Time delay before start up = 10 sec, Pr.11-04 Time delay before stopping = 5 sec

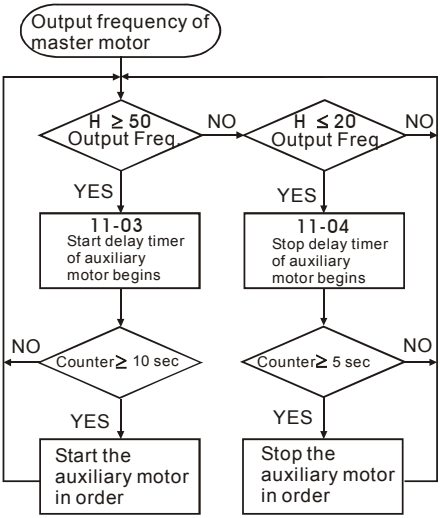

11 - 05	Sleep/Wake Up Detection Time	Unit: 0.1
	Settings 0.0 to 6550.0 sec	Factory Setting: 0.0
11 - 06	Sleep Frequency	Unit: 0.01
	Settings 0.00 to Fmax Hz	Factory Setting: 0.00
11 - 07	Wakeup Frequency	Unit: 0.01
	Settings 0.00 to Fmax Hz	Factory Setting: 0.00

- When the actual output frequency ≤ Pr.11-06 and the time exceeds the setting of Pr.11-05, the AC motor drive will be in sleep mode.
- When the actual frequency command > Pr.11-07 and the time exceeds the setting of Pr.11-05, the AC motor drive will restart.
- When the AC motor drive is in sleep mode, frequency command is still calculated by PID. When frequency reaches wake up frequency, AC motor drive will accelerate from Pr.01-05 min. frequency by V/f curve.
- The wake up frequency must be higher than sleep frequency.

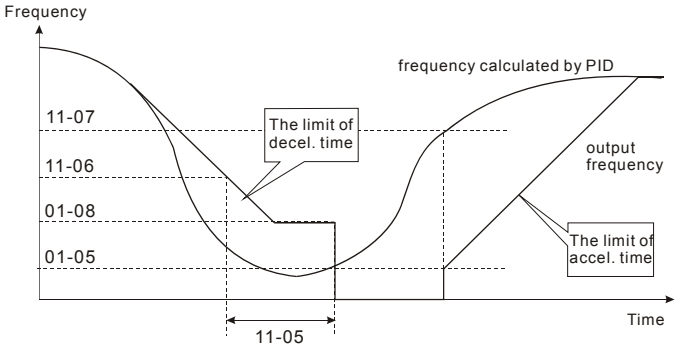

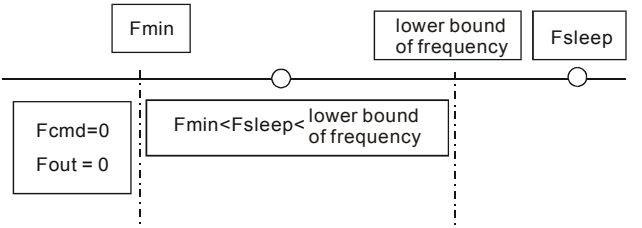

- When output frequency ≦ sleep frequency and time > detection time, it will go in sleep mode.
- When min. output frequency ≦ PID frequency ≦ lower bound of frequency and sleep function is enabled (output frequency ≦ sleep frequency and time > detection time), frequency will be 0 (in sleep mode). If sleep function is disabled, frequency command = lower bound frequency.
- When PID frequency < min. output frequency and sleep function is enabled (output frequency ≦ sleep frequency and time > detection time), output frequency =0 (in sleep mode).
  If output frequency ≦ sleep frequency but time < detection time, frequency command = lower frequency. If sleep function is disabled, output frequency =0.

This page intentionally left blank.

Chapter 6 Fault Code Information

The AC motor drive has a comprehensive fault diagnostic system that includes several different alarms and fault messages. Once a fault is detected, the corresponding protective functions will be activated. The following faults are displayed as shown on the AC motor drive digital keypad display. The four most recent faults can be read from the digital keypad or communication.

NOTE

Wait 5 seconds after a fault has been cleared before performing reset via keypad of input terminal.

6.1 Common Problems and Solutions

Fault Name	Fault Descriptions	Corrective Actions
oc	**Over current** Abnormal increase in current.	1. Check if motor power corresponds with the AC motor drive output power. 2. Check the wiring connections to U, V, W for possible short circuits. 3. Check the wiring connections between the AC motor drive and motor for possible short circuits, also to ground. 4. Check for loose contacts between AC motor drive and motor. 5. Increase the Acceleration Time. 6. Check for possible excessive loading conditions at the motor. 7. If there are still any abnormal conditions when operating the AC motor drive after a short-circuit is removed and the other points above are checked, it should be sent back to manufacturer.
occ	**IGBT protection** (Insulated Gate Bipolar Transistor)	
ou	**Over voltage** The DC bus voltage has exceeded its maximum allowable value.	1. Check if the input voltage falls within the rated AC motor drive input voltage range. 2. Check for possible voltage transients. 3. DC-bus over-voltage may also be caused by motor regeneration. Either increase the Decel. Time or add an optional brake resistor (and brake unit). 4. Check whether the required braking power is within the specified limits.

Fault Name	Fault Descriptions	Corrective Actions
oH	**Overheating** Heat sink temperature too high	1. Ensure that the ambient temperature falls within the specified temperature range. 2. Make sure that the ventilation holes are not obstructed. 3. Remove any foreign objects from the heatsinks and check for possible dirty heat sink fins. 4. Check the fan and clean it. 5. Provide enough spacing for adequate ventilation.
Lu	**Low voltage** The AC motor drive detects that the DC bus voltage has fallen below its minimum value.	1. Check whether the input voltage falls within the AC motor drive rated input voltage range. 2. Check whether the motor has sudden load. 3. Check for correct wiring of input power to R-S-T (for 3-phase models) without phase loss.
oL	**Overload** The AC motor drive detects excessive drive output current. **NOTE: The AC motor drive can withstand up to 150% of the rated current for a maximum of 60 seconds.**	1. Check whether the motor is overloaded. 2. Reduce torque compensation setting in Pr.7-02. 3. Take the next higher power AC motor drive model.
oL1	**Overload 1** Internal electronic overload trip	1. Check for possible motor overload. 2. Check electronic thermal overload setting. 3. Use a higher power motor. 4. Reduce the current level so that the drive output current does not exceed the value set by the Motor Rated Current Pr.7-00.
oL2	**Overload 2** Motor overload.	1. Reduce the motor load. 2. Adjust the over-torque detection setting to an appropriate setting (Pr.06-03 to Pr.06-05).
HPF.1	**GFF hardware error**	Return to the factory.
HPF.2	**CC (current clamp)**	
HPF.3	**OC hardware error**	
HPF.4	**OV hardware error**	
cE-	**Communication Error**	1. Check the RS485 connection between the AC motor drive and RS485 master for loose wires and wiring to correct pins. 2. Check if the communication protocol, address, transmission speed, etc. are properly set. 3. Use the correct checksum calculation. 4. Please refer to group 9 in the chapter 5 for detail information.

Fault Name	Fault Descriptions	Corrective Actions
ocA	**Over-current during acceleration**	1. Short-circuit at motor output: Check for possible poor insulation at the output lines. 2. Torque boost too high: Decrease the torque compensation setting in Pr.7-02. 3. Acceleration Time too short: Increase the Acceleration Time. 4. AC motor drive output power is too small: Replace the AC motor drive with the next higher power model.
ocd	**Over-current during deceleration**	1. Short-circuit at motor output: Check for possible poor insulation at the output line. 2. Deceleration Time too short: Increase the Deceleration Time. 3. AC motor drive output power is too small: Replace the AC motor drive with the next higher power model.
ocn	**Over-current during steady state operation**	1. Short-circuit at motor output: Check for possible poor insulation at the output line. 2. Sudden increase in motor loading: Check for possible motor stall. 3. AC motor drive output power is too small: Replace the AC motor drive with the next higher power model.
EF	**External Fault**	1. Input EF (N.O.) on external terminal is closed to GND. Output U, V, W will be turned off. 2. Give RESET command after fault has been cleared.
EF1	**Emergency stop**	1. When the multi-function input terminals MI1 to MI6 are set to emergency stop (setting 19 or 20), the AC motor drive stops output U, V, W and the motor coasts to stop. 2. Press RESET after fault has been cleared.
cF1	**Internal EEPROM can not be programmed.**	Return to the factory.
cF2	**Internal EEPROM can not be read.**	Return to the factory.
cF3.3	**U-phase error**	Return to the factory.
cF3.4	**V-phase error**	
cF3.5	**W-phase error**	
cF3.6	**OV or LV**	
cF3.7	**Current sensor error**	
cF3.8	**OH error**	
CcodE	**Software protection failure**	Return to the factory.
PcodE	**Password is locked.**	Keypad will be locked. Turn the power ON after power OFF to re-enter the correct password. See Pr.00-07 and 00-08.
cFA	**Auto accel/decel failure**	1. Check if the motor is suitable for operation by AC motor drive. 2. Check if the regenerative energy is too large. 3. Load may have changed suddenly.

Fault Name	Fault Descriptions	Corrective Actions
GFF	**Ground fault**	When (one of) the output terminal(s) is grounded, short circuit current is more than 50% of AC motor drive rated current, the AC motor drive power module may be damaged. **NOTE: The short circuit protection is provided for AC motor drive protection, not for protection of the user.** 1. Check whether the IGBT power module is damaged. 2. Check for possible poor insulation at the output line.
bb	**External Base Block.** (Refer to Pr. 08-06)	1. When the external input terminal (B.B) is active, the AC motor drive output will be turned off. 2. Deactivate the external input terminal (B.B) to operate the AC motor drive again.
AnLEr	**Analog feedback error or ACI open circuit**	1. Check parameter settings and wiring of Analog feedback (Pr.10-00). 2. Check for possible fault between system response time and the feedback signal detection time (Pr.10-08).
PGErr	**PG feedback signal error**	1. Check parameter settings and signal type of PG feedback (Pr.10-10 and Pr.10-11). 2. Check if the wiring of PG card is correct.
AUE	**Auto Tuning Error**	1. Check cabling between drive and motor 2. Retry again
cEF	**EF when preliminary count value attained**	1. Check counter trigger signal 2. Check Pr.03-09, Pr.03-11setting
Lc	**Under Current**	1. Check Load current 2. Check Pr.06-12 to Pr.06-15 setting
PHL	**Phase Loss**	Check Power Source Input if all 3 input phases are connected without loose contacts.

6.2 Reset

There are three methods to reset the AC motor drive after solving the fault:

1. Press STOP RESET key on PU01.
2. Set external terminal to “RESET” (set one of Pr.04-04~Pr.04-09 to 05) and then set to be ON.
3. Send “RESET” command by communication.

NOTE

Make sure that RUN command or signal is OFF before executing RESET to prevent damage or personal injury due to immediate operation.

7.1 Over Current (OC)

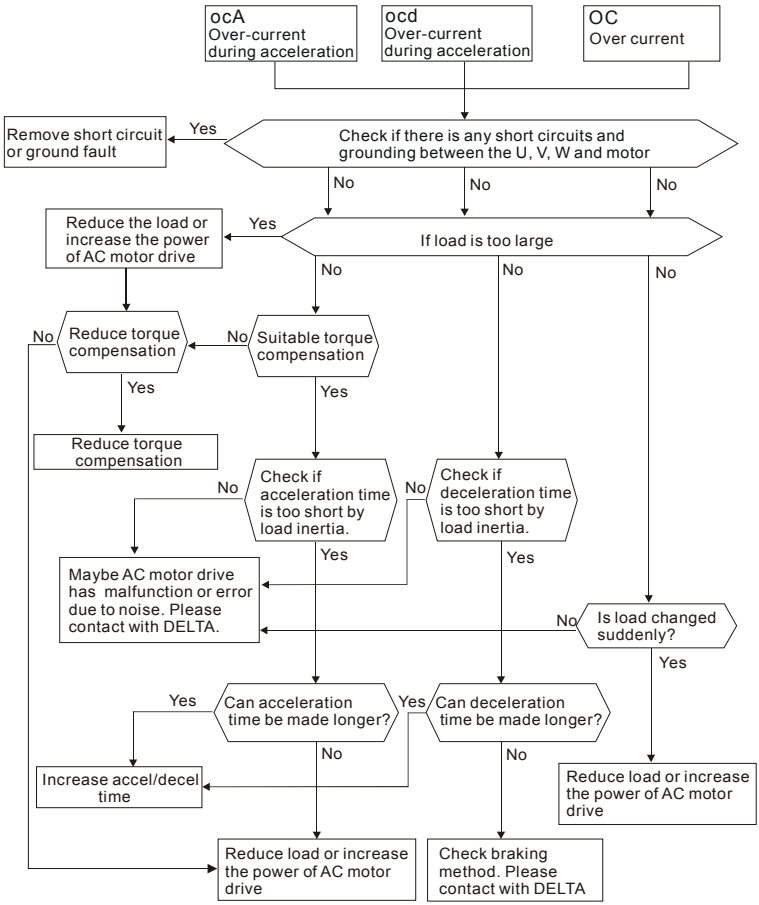

7.2 Ground Fault

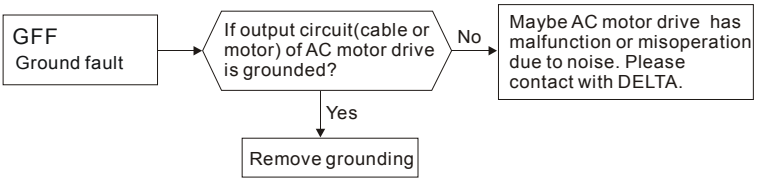

7.3 Over Voltage (OV)

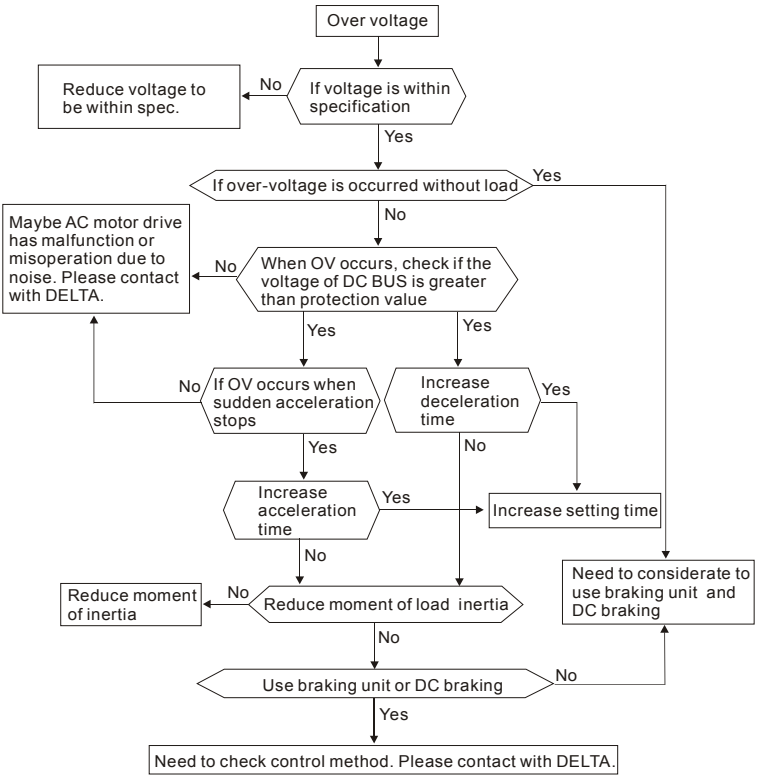

7.4 Low Voltage (Lv)

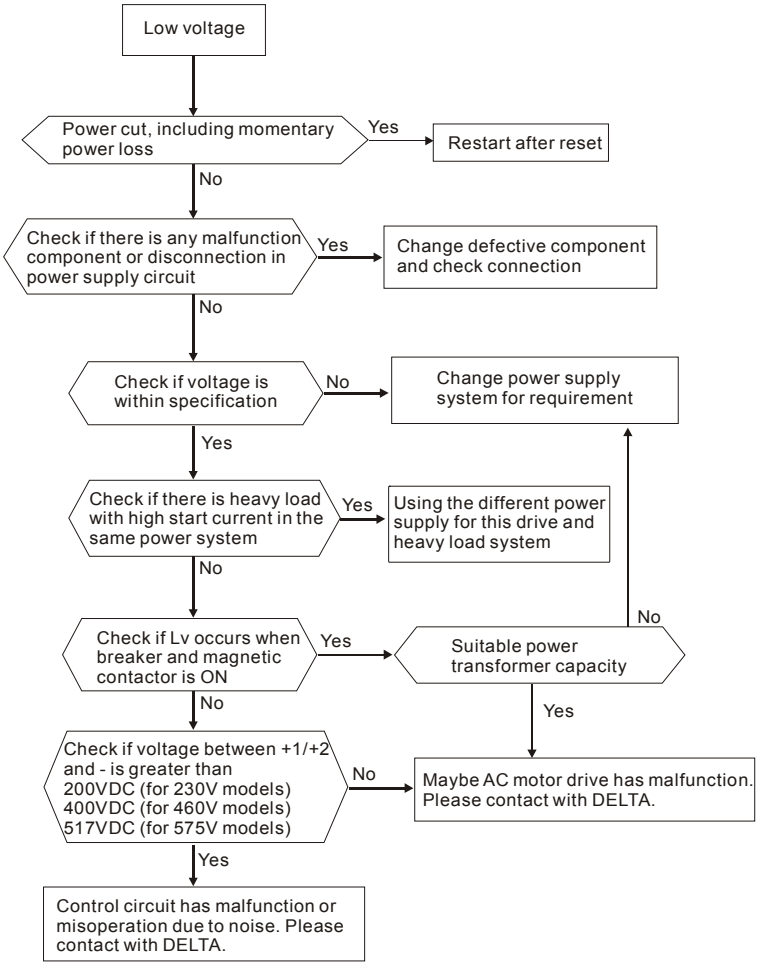

7.5 Over Heat (OH)

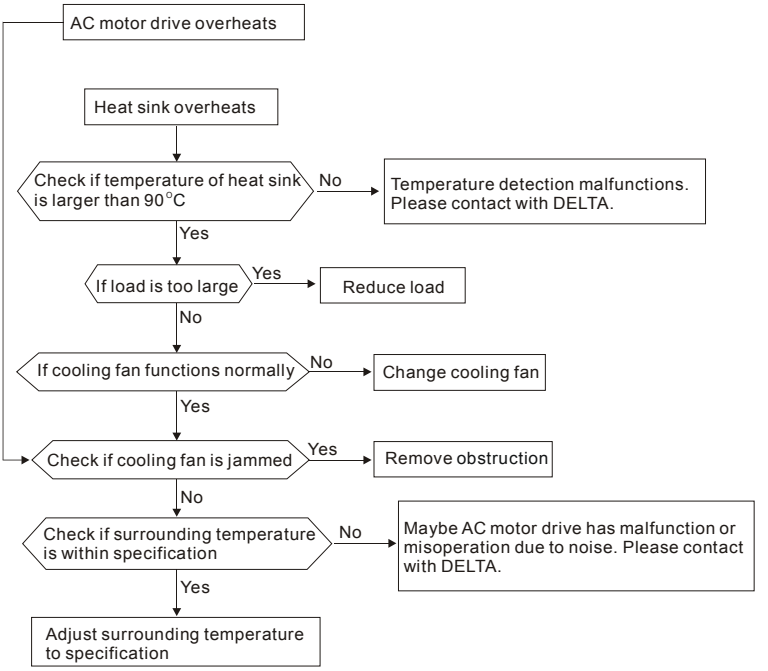

7.6 Overload

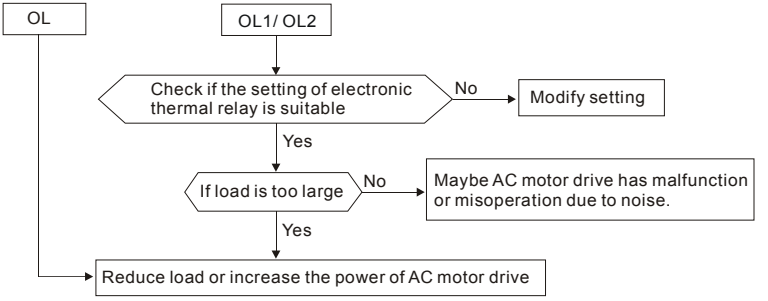

7.7 Display of PU01 is Abnormal

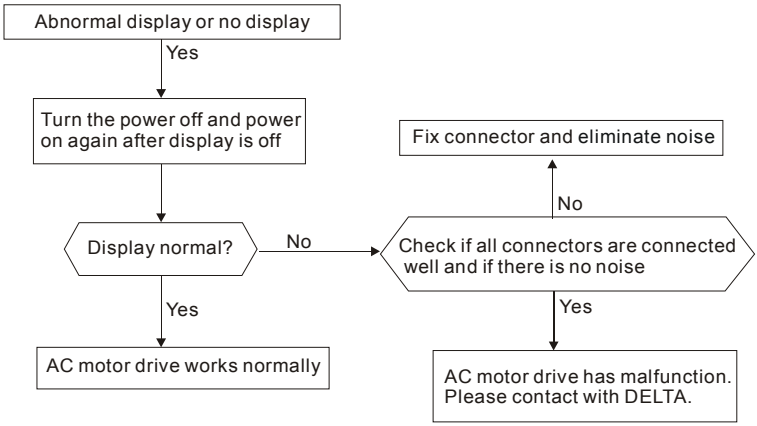

7.8 Phase Loss (PHL)

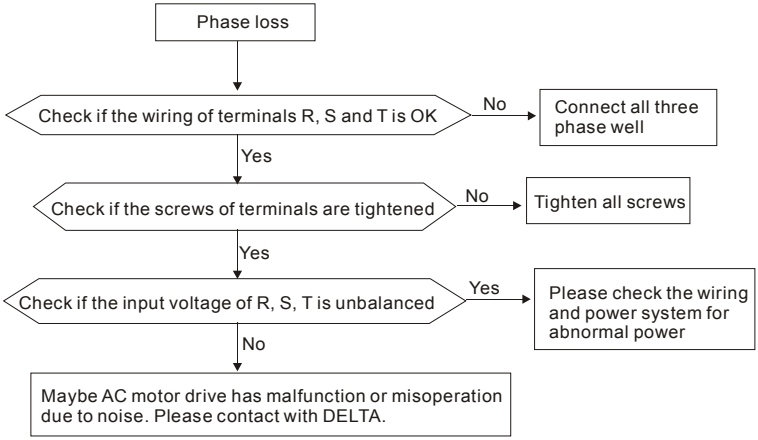

7.9 Motor cannot Run

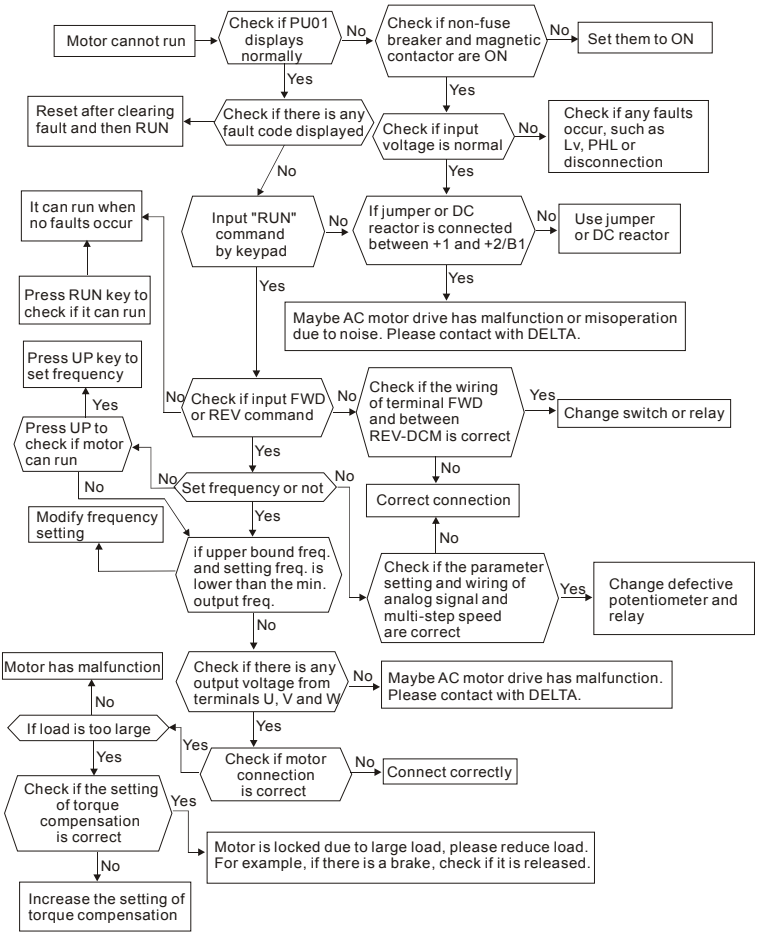

7.10 Motor Speed cannot be Changed

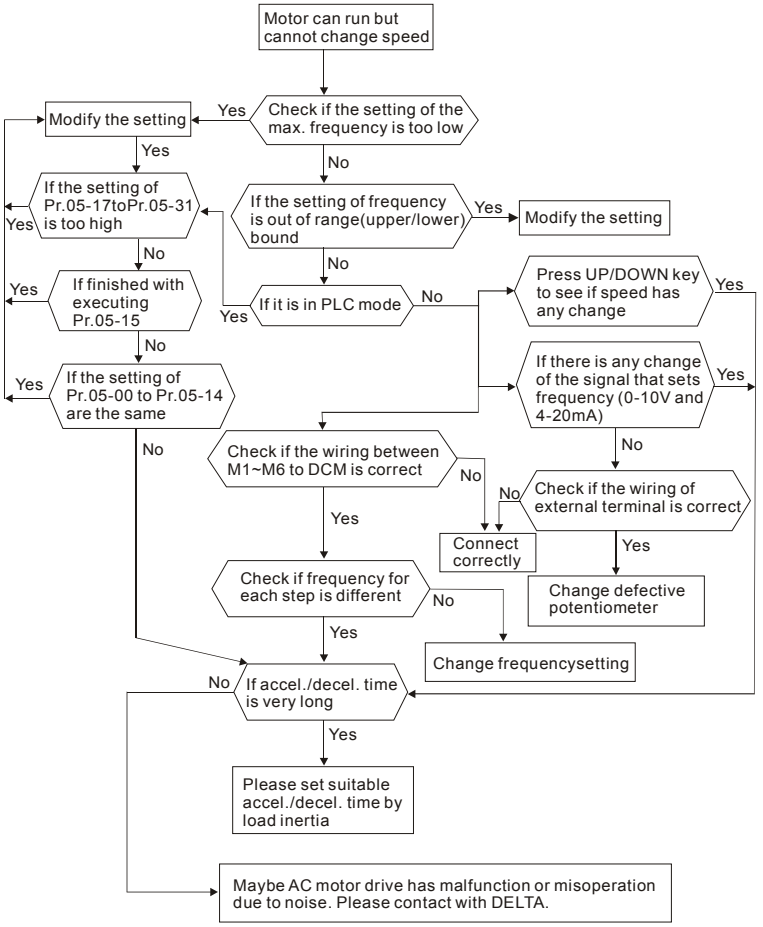

7.11 Motor Stalls during Acceleration

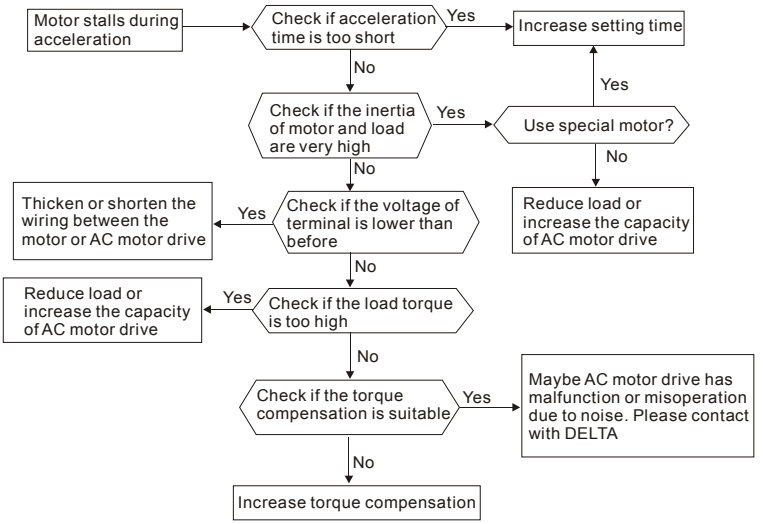

7.12 The Motor does not Run as Expected

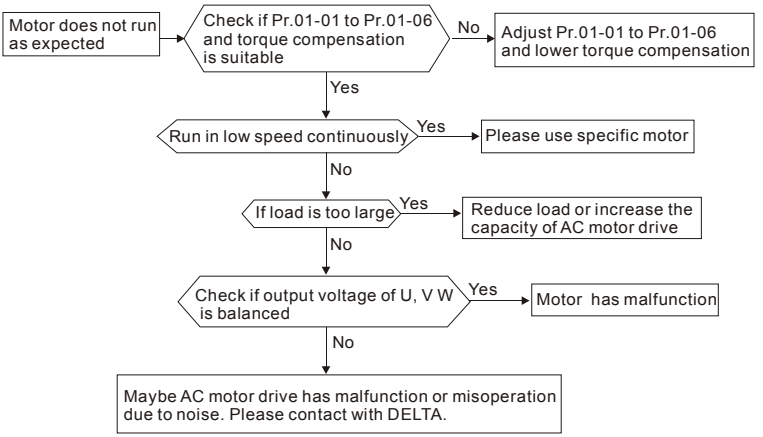

7.13 Electromagnetic/Induction Noise

There are many noises surround the AC motor drives and invade it by radiation or power circuit. It may cause the misoperation of control circuit and even damage the AC motor drive. Of course, that is a solution to increase the noise tolerance of AC motor drive. But it is not the best one due to the limit. Therefore, solve it from the outside as following will be the best.

1. Add surge killer on the relay or contact to suppress switching surge between ON/OFF.
2. Shorten the wiring length of the control circuit or serial circuit and separate from the main circuit wiring.
3. Comply with the wiring regulation for those shielded wire and use isolation amplifier for long wire.
4. The grounding terminal should comply with the local regulation and ground independently, i.e. not to have common ground with electric welding machine and power equipment.
5. Connect a noise filter at the input terminal of the AC motor drive to prevent noise from power circuit.

In a word, three-level solutions for electromagnetic noise are “no product”, “no spread” and “no receive”.

7.14 Environmental Condition

Since AC motor drive is an electronic device, you should comply with the environmental condition stated in the appendix A. Following are the remedial measures for necessary.

1. To prevent vibration, anti-vibration spacer is the last choice. The vibration tolerance must be within the specification. The vibration effect is equal to the mechanical stress and it cannot occur frequently, continuously or repeatedly to prevent damaging AC motor drive.
2. Store in a clean and dry location free from corrosive fumes/dust to prevent rustiness, poor contact. It also may cause short by low insulation in a humid location. The solution is to use both paint and dust-proof. For particular occasion, use the enclosure with whole-seal structure.
3. The surrounding temperature should be within the specification. Too high or low temperature will affect the lifetime and reliability. For semiconductor components, damage will occur once any specification is out of range. Therefore, it is necessary to clean and periodical check for the air cleaner and cooling fan besides having cooler and sunshade. In additional, the microcomputer may not work in extreme low temperature and needs to have heater.
4. Store within a relative humidity range of 0% to 90% and non-condensing environment. Do not turn off the air conditioner and have exsiccator for it.

7.15 Affecting Other Machines

AC motor drive may affect the operation of other machine due to many reasons. The solutions are as follows.

■ High Harmonic at Power Side

If there is high harmonic at power side during running, the improved methods are:

1. Separate power system: use transformer for AC motor drive.
2. Use reactor at the power input terminal of AC motor drive or decrease high harmonic by multiple circuit.\
3. If there is phase lead capacitor, it should use serial reactor to prevent capacitor damage from high harmonic.

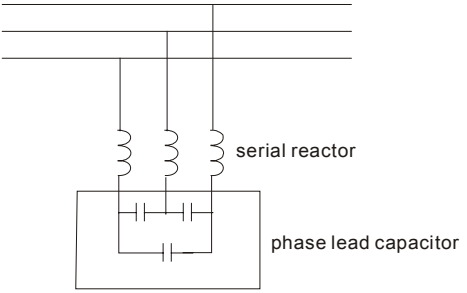

■ Motor Temperature Rises

When the motor is induction motor with ventilation-cooling-type used in variety speed operation, bad cooling will happen in the low speed. Therefore, it may overheat. Besides, high harmonic is in output waveform to increase copper loss and iron loss. Following measures should be used by load situation and operation range when necessary.

1. Use the motor with independent power ventilation or increase the horsepower.
2. Use inverter duty motor.
3. Do NOT run in the low speed.

Chapter 8 Maintenance and Inspections

Modern AC motor drives are based on solid state electronics technology. Preventive maintenance is required to operate this AC motor drive in its optimal condition, and to ensure a long life. It is recommended to have a check-up of the AC motor drive performed by a qualified technician.

Daily Inspection:

Basic check-up items to detect if there were any abnormalities during operation are:

1. Whether the motors are operating as expected.
2. Whether the installation environment is abnormal.
3. Whether the cooling system is operating as expected.
4. Whether any irregular vibration or sound occurred during operation.
5. Whether the motors are overheating during operation.
6. Always check the input voltage of the AC drive with a Voltmeter.

Periodic Inspection:

Before the check-up, always turn off the AC input power and remove the cover. Wait at least 10 minutes after all display lamps have gone out, and then confirm that the capacitors have fully discharged by measuring the voltage between +1/+2 and -. The voltage between +1/+2 and - should be less than 25VDC.

DANGER!

1. Disconnect AC power before processing!
2. Only qualified personnel can install, wire and maintain AC motor drives. Please take off any metal objects, such as watches and rings, before operation. And only insulated tools are allowed.
3. Never reassemble internal components or wiring.
4. Prevent electric shocks.

Periodical Maintenance

■ Ambient environment

Check Items	Methods and Criterion	Maintenance Period		
		Daily	Half Year	One Year
Check the ambient temperature, humidity, vibration and see if there are any dust, gas, oil or water drops	Visual inspection and measurement with equipment with standard specification	○		
If there are any dangerous objects	Visual inspection	○		

■ Voltage

Check Items	Methods and Criterion	Maintenance Period		
		Daily	Half Year	One Year
Check if the voltage of main circuit and control circuit is correct	Measure with multimeter with standard specification	○		

■ Keypad

Check Items	Methods and Criterion	Maintenance Period		
		Daily	Half Year	One Year
Is the display clear for reading	Visual inspection	○		
Any missing characters	Visual inspection	○		

■ Mechanical parts

Check Items	Methods and Criterion	Maintenance Period		
		Daily	Half Year	One Year
If there is any abnormal sound or vibration	Visual and aural inspection		○	
If there are any loose screws	Tighten the screws		○	

Check Items	Methods and Criterion	Maintenance Period		
		Daily	Half Year	One Year
If any part is deformed or damaged	Visual inspection		○	
If there is any color change by overheating	Visual inspection		○	
If there is any dust or dirt	Visual inspection		○	

■ **Main circuit**

Check Items	Methods and Criterion	Maintenance Period		
		Daily	Half Year	One Year
If there are any loose or missing screws	Tighten or replace the screw		○	
If machine or insulator is deformed, cracked, damaged or with color change due to overheating or ageing	Visual inspection **NOTE: Please ignore the color change of copper plate**		○	
If there is any dust or dirt	Visual inspection		○	

■ **Terminals and wiring of main circuit**

Check Items	Methods and Criterion	Maintenance Period		
		Daily	Half Year	One Year
If the wiring is color change or deformation due to overheat	Visual inspection		○	
If the insulator of wiring is damaged or color change	Visual inspection		○	
If there is any damage	Visual inspection		○	

■ **DC capacity of main circuit**

Check Items	Methods and Criterion	Maintenance Period		
		Daily	Half Year	One Year
If there is any leak of liquid, color change, crack or deformation	Visual inspection	○		
Measure static capacity when required	Static capacity ≥ initial value X 0.85		○	

■ **Resistor of main circuit**

Check Items	Methods and Criterion	Maintenance Period		
		Daily	Half Year	One Year
If there is any peculiar smell or insulator cracks due to overheat	Visual inspection, smell		○	
If there is any disconnection	Visual inspection or measure with multimeter after removing wiring between +1/+2 ~ - Resistor value should be within ± 10%		○	

■ **Transformer and reactor of main circuit**

Check Items	Methods and Criterion	Maintenance Period		
		Daily	Half Year	One Year
If there is any abnormal vibration or peculiar smell	Visual, aural inspection and smell		○	

■ **Magnetic contactor and relay of main circuit**

Check Items	Methods and Criterion	Maintenance Period		
		Daily	Half Year	One Year
If there are any loose screws	Visual and aural inspection	○		
If the contact works correctly	Visual inspection	○		

■ **Printed circuit board and connector of main circuit**

Check Items	Methods and Criterion	Maintenance Period		
		Daily	Half Year	One Year
If there are any loose screws and connectors	Tighten the screws and press the connectors firmly in place.		○	
If there is any peculiar smell and color change	Visual inspection		○	
If there is any crack, damage, deformation or corrosion	Visual inspection		○	
If there is any liquid is leaked or deformation in capacity	Visual inspection		○	

■ **Cooling fan of cooling system**

Check Items	Methods and Criterion	Maintenance Period		
		Daily	Half Year	One Year
If there is any abnormal sound or vibration	Visual, aural inspection and turn the fan with hand (turn off the power before operation) to see if it rotates smoothly			○
If there is any loose screw	Tighten the screw			○
If there is any color change due to overheat	Change fan			○

■ **Ventilation channel of cooling system**

Check Items	Methods and Criterion	Maintenance Period		
		Daily	Half Year	One Year
If there is any obstruction in the heat sink, air intake or air outlet	Visual inspection	○		

This page intentionally left blank.

Appendix A Specifications

Voltage Class		230V Class											
Model Number VFD-XXXB		007	015	022	037	055	075	110	150	185	220	300	370
Max. Applicable Motor Output (kW)		0.75	1.5	2.2	3.7	5.5	7.5	11	15	18.5	22	30	37
Max. Applicable Motor Output (hp)		1.0	2.0	3.0	5.0	7.5	10	15	20	25	30	40	50
Output Rating	Rated Output Capacity (kVA)	1.9	2.5	4.2	6.5	9.5	12.5	18.3	24.7	28.6	34.3	45.7	55.0
	Rated Output Current (A)	5.0	7.0	11	17	25	33	49	65	75	90	120	145
	Maximum Output Voltage (V)	3-Phase Proportional to Input Voltage											
	Output Frequency (Hz)	0.1~400 Hz											
	Carrier Frequency (kHz)	1-15									1-9		
Input Rating	Rated Input Current (A)	Single/3-phase			3-phase								
		11.9/ 5.7	15.3/ 7.6	22/ 15.5	20.6	26	34	50	60	75	90	110	142
	Input Current for 1-phase models when using 3-phase power	7.0	9.4	14.0	--								
	Rated Voltage/Frequency	Single/3-phase 200-240 V, 50/60Hz			3-phase 200-240V, 50/60Hz								
	Voltage Tolerance	± 10%(180~264 V)											
	Frequency Tolerance	± 5%(47~63 Hz)											
Cooling Method		Natural	Fan Cooled										
Weight (kg)		2.7	3.2	4.5	6.8	8	10	13	13	13	13	36	36

Voltage Class		460V Class														
Model Number VFD-XXXB		007	015	022	037	055	075	110	150	185	220	300	370	450	550	750
Max. Applicable Motor Output (kW)		0.75	1.5	2.2	3.7	5.5	7.5	11	15	18.5	22	30	37	45	55	75
Max. Applicable Motor Output (hp)		1.0	2.0	3.0	5.0	7.5	10	15	20	25	30	40	50	60	75	100
Output Rating	Rated Output Capacity (kVA)	2.3	3.2	4.2	6.5	9.9	13.7	18.3	24.4	28.9	34.3	45.7	55.6	69.3	84	114
	Rated Output Current (A)	2.7	4.2	5.5	8.5	13	18	24	32	38	45	60	73	91	110	150
	Maximum Output Voltage (V)	3-phase Proportional to Input Voltage														
	Output Frequency (Hz)	0.1~400 Hz														
	Carrier Frequency (kHz)	1-15									1-9				1-6	
Input Rating	Rated Input Current (A)	3-phase														
		3.2	4.3	5.9	11.2	14	19	25	32	39	49	60	63	90	130	160
	Rated Voltage	3-phase 380 to 480 V														
	Voltage Tolerance	± 10%(342~528 V)														
	Frequency Tolerance	± 5%(47~63 Hz)														
Cooling Method		Natural	Fan Cooled													
Weight (kg)		2.7	3.2	4.5	6.8	8	10	13	13	13	13	36	36	36	50	50

Voltage Class		575V Class														
Model Number VFD-XXXB		007	015	022	037	055	075	110	150	185	220	300	370	450	550	750
Max. Applicable Motor Output (kW)		0.75	1.5	2.2	3.7	5.5	7.5	11	15	18.5	22	30	37	45	55	75
Max. Applicable Motor Output (hp)		1.0	2.0	3.0	5.0	7.5	10	15	20	25	30	40	50	60	75	100
Output Rating	Rated Output Capacity (kVA)	1.7	3.5	4.5	7.5	10	13.4	18.9	21.9	26.9	33.9	40.8	51.8	61.7	79.7	99.6
	Rated Output Current (A)	1.7	3.5	4.5	7.5	10	13.5	19	22	27	34	41	52	62	80	100
	Maximum Output Voltage (V)	3-phase Proportional to Input Voltage														
	Output Frequency (Hz)	0.1~400 Hz														
	Carrier Frequency (kHz)	1-10							1-8						1-6	
Input Rating	Rated Input Current (A)	3-phase														
		1.2	3.1	4.0	8.3	10.3	13.8	18.2	22	27.7	32	41	52	62	74	91
	Rated Voltage	3-phase 500 to 600 V														
	Voltage Tolerance	-15% ~ +10% (425~660V)														
	Frequency Tolerance	± 5% (47~63Hz)														
Cooling Method		Natural		Fan Cooled												
Weight (kg)		2.7	3.2	4.5	6.8	8	10	13	13	13	13	36	36	36	50	50

General Specifications			
Control Characteristics	Control System		SPWM(Sinusoidal Pulse Width Modulation) control (V/f or sensorless vector control)
	Frequency Setting Resolution		0.01Hz
	Output Frequency Resolution		0.01Hz
	Torque Characteristics		Including the auto-torque, auto-slip compensation; starting torque can be 150% at 1.0Hz
	Overload Endurance		150% of rated current for 1 minute
	Skip Frequency		Three zones, settings range 0.1-400Hz
	Accel/Decel Time		0.1 to 3600 seconds (4 Independent settings for Accel/Decel time)
	Stall Prevention Level		20 to 250%, setting of rated current
	DC Braking		Operation frequency 0.1-400.0Hz, output 0-100% rated current Start time 0-60 seconds, stop time 0-60 seconds
	Regenerated Braking Torque		Approx. 20%(up to 125% possible with option braking resistor or braking unit externally mounted, 1-15HP braking transistor built-in)
	V/f Pattern		Adjustable V/f pattern, 1.5 power curve, 1.7 power curve, square and cube curve
Operating Characteristics	Frequency Setting	Keypad	Setting by ▲ ▼
		External Signal	Potentiometer-5kΩ/0.5W, 0 to +10VDC; -10 to +10VDC, 4 to 20mA RS-485 interface; Multi-Function Inputs 1 to 6 (15 steps, Jog, up/down)
	Operation Setting Signal	Keypad	Set by RUN, STOP and JOG
		External Signal	2 wires/3 wires (Fwd, Rev, EF), JOG operation, RS-485 serial interface (MODBUS), process logic control
	Multi-Function Input Signal		Multi-step selection 0 to 15, Jog, accel/decel inhibit, first to forth accel/decel switches, counter, PLC operation, external Base Block (NC, NO), auxiliary motor control is invalid, ACI/AVI/AUI selections, driver reset, UP/DOWN key settings, sink/source selection

General Specifications		
	Multi-Function Output Indication	AC drive operating, frequency attained, non-zero, Base Block, fault indication, local/remote indication, PLC operation indication, auxiliary motor output, driver is ready, overheat alarm, emergency stop
	Analog Output Signal	Output frequency/current/voltage/frequency command/speed/factor
Alarm Output Contact		Contact will be On when it malfunctions (1 Form C contact or 3 open collector outputs)
Operation Functions		AVR, accel/decel S-Curve, over-voltage/over-current stall prevention, fault records, reverse inhibition, momentary power loss restart, DC braking, auto torque/slip compensation, auto tuning, adjustable carrier frequency, output frequency limits, parameter lock/reset, vector control, counter, PG feedback control, PID control, fan & pump control, external counter, PLC, MODBUS communication, abnormal reset, abnormal re-start, power-saving, sleep/revival function, digital frequency output, fan control, sleep/wake frequency, master/auxiliary frequency, 1st/2nd frequency source selections
Protection Functions		Over voltage, over current, under voltage, under current, external fault, overload, ground fault, overheating, electronic thermal, IGBT short circuit
Display Keypads		8-key, 7-segment LED with 5-digit, 8 status LEDs, master frequency, output frequency, output current, custom units, parameter values for setup and lock, faults, RUN, STOP, RESET, FWD/REV, JOG
Enviromental Conditions	Enclosure Rating	IP20
	Pollution Degree	2
	Installation Location	Altitude 1,000 m or lower, keep from corrosive gasses, liquid and dust
	Ambient Temperature	-10°C to 40°C Non-Condensing and not frozen
	Storage/ Transportation Temperature	-20 °C to 60 °C
	Ambient Humidity	Below 90% RH (non-condensing)
	Vibration	9.80665m/s2 (1G) less than 20Hz, 5.88m/s2 (0.6G) at 20 to 50Hz
Approvals		CE c UL us

This page intentionally left blank.

Appendix B Accessories

B.1 All Braking Resistors & Braking Units Used in AC Motor Drives

Note: Please only use DELTA resistors and recommended values. Other resistors and values will void Delta's warranty. Please contact your nearest Delta representative for use of special resistors. For instance, in 460V series, 100hp/75kW, the AC motor drive needs 2 braking units with total of 16 braking resistors, so each braking unit uses 8 braking resistors. The braking unit should be at least 10 cm away from AC motor drive to avoid possible interference. Refer to the "Braking Unit Module User Manual" for further details.

Voltage	Applicable Motor		Full Load Torque Nm	Resistor value spec for each AC Motor Drive	Braking Unit Model VFDB No. of Units Used		Braking Resistors Model and No. of Units Used		Braking Torque 10%ED	Min. Equivalent Resistor Value for each AC Motor Drive
	hp	kW								
230V Series	1	0.75	0.427	80W 200Ω			BR080W200	1	125	82Ω
	2	1.5	0.849	300W 100Ω			BR300W100	1	125	82Ω
	3	2.2	1.262	300W 100Ω			BR300W100	1	125	82Ω
	5	3.7	2.080	400W 40Ω			BR400W040	1	125	33Ω
	7.5	5.5	3.111	500W 30Ω			BR500W030	1	125	30Ω
	10	7.5	4.148	1000W 20Ω			BR1K0W020	1	125	20Ω
	15	11	6.186	2400W 13.6Ω			BR1K2W6P8	2	125	13.6Ω
	20	15	8.248	3000W 10Ω	2015	1	BR1K5W005	2	125	10Ω
	25	18.5	10.281	4800W 8Ω	2022	1	BR1K2W008	4	125	8Ω
	30	22	12.338	4800W 6.8Ω	2022	1	BR1K2W6P8	4	125	6.8Ω
	40	30	16.497	6000W 5Ω	2015	2	BR1K5W005	4	125	5Ω
	50	37	20.6	9600W 4Ω	2015	2	BR1K2W008	8	125	4Ω
460V Series	1	0.75	0.427	80W 750Ω			BR080W750	1	125	160Ω
	2	1.5	0.849	300W 400Ω			BR300W400	1	125	160Ω
	3	2.2	1.262	300W 250Ω			BR300W250	1	125	160Ω
	5	3.7	2.080	400W 150Ω			BR400W150	1	125	130Ω
	7.5	5.5	3.111	500W 100Ω			BR500W100	1	125	91Ω
	10	7.5	4.148	1000W 75Ω			BR1K0W075	1	125	62Ω
	15	11	6.186	1000W 50Ω			BR1K0W050	1	125	39Ω
	20	15	8.248	1500W 40Ω	4030	1	BR1K5W040	1	125	40Ω
	25	18.5	10.281	4800W 32Ω	4030	1	BR1K2W008	4	125	32Ω
	30	22	12.338	4800W 27.2Ω	4030	1	BR1K2W6P8	4	125	27.2Ω
	40	30	16.497	6000W 20Ω	4030	1	BR1K5W005	4	125	20Ω
	50	37	20.6	9600W 16Ω	4045	1	BR1K2W008	8	125	16Ω
	60	45	24.745	9600W 13.6Ω	4045	1	BR1K2W6P8	8	125	13.6Ω
	75	55	31.11	12000W 10Ω	4030	2	BR1K5W005	8	125	10Ω
	100	75	42.7	19200W 6.8Ω	4045	2	BR1K2W6P8	16	125	6.8Ω

Voltage	Applicable Motor hp	Applicable Motor kW	Full Load Torque Nm	Resistor value spec for each AC Motor Drive	Braking Unit Model VFDB	No. of Units Used	Braking Resistors Model and No. of Units Used		Braking Torque 10%ED	Min. Equivalent Resistor Value for each AC Motor Drive
575V Series	1	0.75	0.427	300W 400Ω			BR300W400	1	125	200Ω
	2	1.5	0.849	300W 250Ω			BR300W250	1	125	200Ω
	3	2.2	1.262	400W 150Ω			BR400W150	1	125	130Ω
	5	3.7	2.080	400W 150Ω			BR400W150	1	125	130Ω
	7.5	5.5	3.111	500W 100Ω			BR500W100	1	125	82Ω
	10	7.5	4.148	500W 100Ω			BR500W100	1	125	82Ω
	15	11	6.186	500W 100Ω			BR500W100	1	125	82Ω
	20	15	8.248	3000W 60Ω	5055	1	BR1K0W020	3	125	60Ω
	25	18.5	10.281	4000W 50Ω	5055	1	BR1K0W050	4	125	50Ω
	30	22	12.338	6000W 40Ω	5055	1	BR1K2W008	5	125	40Ω
	40	30	16.497	6000W 34Ω	5055	1	BR1K2W6P8	5	125	34Ω
	50	37	20.6	7500W 25Ω	5055	1	BR1K5W005	5	125	25Ω
	60	45	24.745	12000W 20Ω	5055	1	BR1K2W008	10	125	20Ω
	75	55	31.11	12000W 17Ω	5055	1	BR1K2W6P8	10	125	17Ω
	100	75	42.7	15000W 12.5Ω	5055	2	BR1K5W005	10	125	12.5Ω

NOTE

1. Please select the factory setting resistance value (Watt) and the duty-cycle value (ED%).
2. If damage to the drive or other equipment are due to the fact that the braking resistors and the braking modules in use are not provided by Delta, the warranty will be void.
3. Take into consideration the safety of the environment when installing the braking resistors.
4. If the minimum resistance value is to be utilized, consult local dealers for the calculation of the Watt figures.
5. Please select thermal relay trip contact to prevent resistor over load. Use the contact to switch power off to the AC motor drive!
6. When using more than 2 braking units, equivalent resistor value of parallel braking unit can't be less than the value in the column "Minimum Equivalent Resistor Value for Each AC Drive" (the right-most column in the table). An example of 575V 100HP, the min. equivalent resistor value for each AC motor drive is 12.5Ω with 2 brake units connection. Therefore, the equivalent resistor value for each brake unit should be 25Ω.
7. Please read the wiring information in the user manual of braking unit thoroughly prior to taking into operation.

B.1.1 Dimensions and Weights for Braking Resistors

(Dimensions are in millimeter)

Order P/N: BR080W200, BR080W750, BR300W070, BR300W100, BR300W250, BR300W400, BR400W150, BR400W040

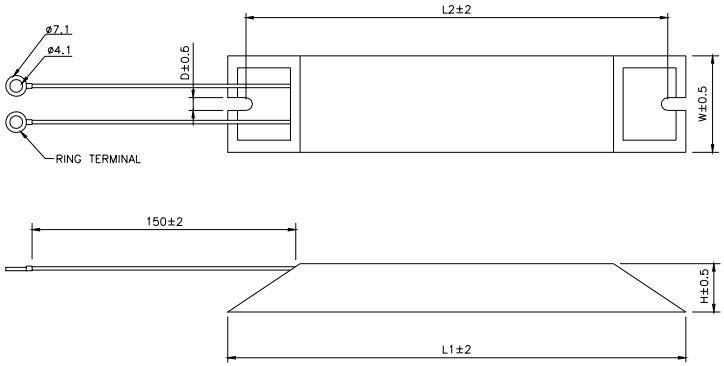

Model no.	L1	L2	H	D	W	Max. Weight (g)
BR080W200	140	125	20	5.3	60	160
BR080W750						
BR300W070	215	200	30	5.3	60	750
BR300W100						
BR300W250						
BR300W400						
BR400W150	265	250	30	5.3	60	930
BR400W040						

Order P/N: BR500W030, BR500W100, BR1KW020, BR1KW075

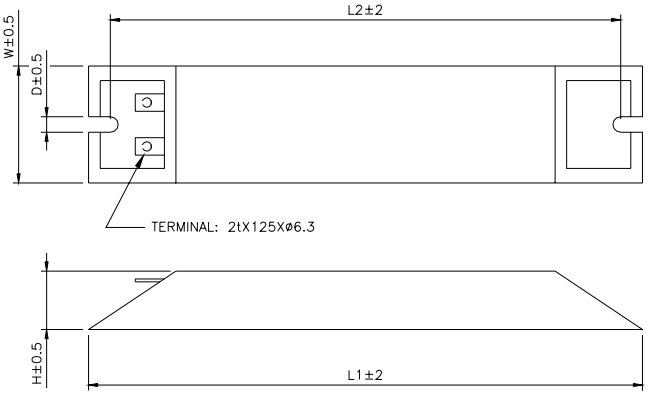

Model no.	L1	L2	H	D	W	Max. Weight (g)
BR500W030	335	320	30	5.3	60	1100
BR500W100						
BR1KW020	400	385	50	5.3	100	2800
BR1KW075						

Order P/N: BR1K0W050, BR1K2W008, BR1K2W6P8, BR1K5W005, BR1K5W040

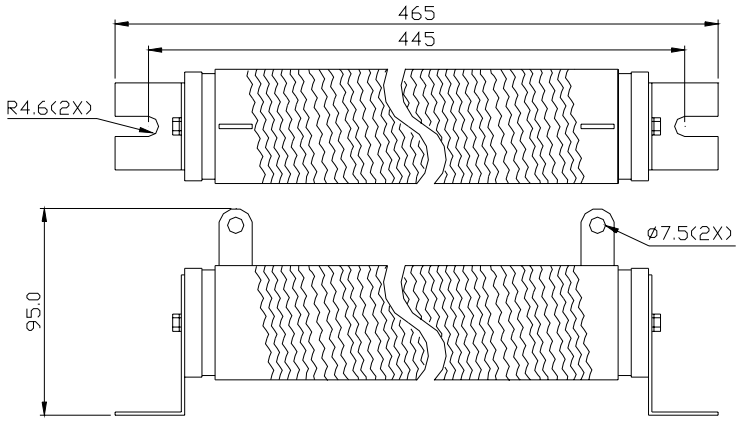

B.1.2 Specifications for Braking Unit

		230V Series		460V Series		575V Series
		2015	2022	4030	4045	5055
Max. Motor Power (KW)		15	22	30	45	55
Output Rating	Max. Peak Discharge Current (A) 10%ED	40	60	40	60	60
	Continuous Discharge Current (A)	15	20	15	18	20
	Braking Start-up Voltage (DC)	330/345/360/380/400 /415±3V		660/690/720/760/800 /830±6V		950±8V
Input Rating	DC Voltage	200~400VDC		400~800VDC		607~1000V DC
Protection	Heat Sink Overheat	Temperature over +95°C (203 °F)				
	Alarm Output	Relay contact 5A 120VAC/28VDC (RA, RB, RC)				
	Power Charge Display	Blackout until bus (+~-) voltage is below 50VDC				
Environment	Installation Location	Indoor (no corrosive gases, metallic dust)				
	Operating Temperature	-10°C ~ +50°C (14°F to 122°F)				
	Storage Temperature	-20°C ~ +60°C (-4°F to 140°F)				
	Humidity	90% Non-condensing				
	Vibration	9.8m/s^2 (1G) under 20Hz 2m/s^2 (0.2G) at 20~50Hz				
Mechanical Configuration		Wall-mounted enclosed type IP50				

B.1.3 Dimensions for Braking Unit

(Dimensions are in millimeter[inch])

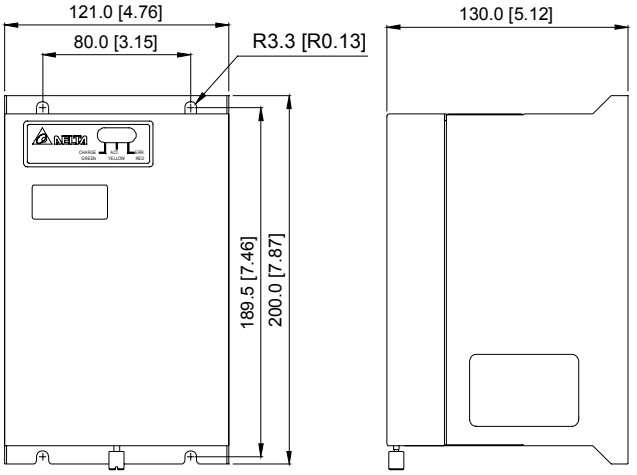

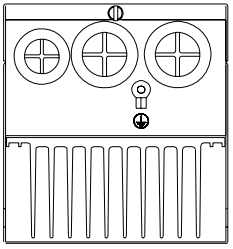

B.2 AMD - EMI Filter Cross Reference

AC Drives	Model Number	FootPrint
VFD007B21A, VFD015B21A	RF015B21AA	Y
VFD022B21A	RF022B21BA	Y
VFD007B43A, VFD015B43A, VFD022B43B	RF022B43AA	Y
VFD037B43A	RF037B43BA	Y
VFD055B43A, VFD075B43A, VFD110B43A	RF110B43CA	Y
VFD007B23A, VFD015B23A	10TDT1W4C	N
VFD022B23A, VFD037B23A	26TDT1W4C	N
VFD055B23A, VFD075B23A, VFD150B43A, VFD185B43A	50TDS4W4C	N
VFD110B23A, VFD150B23A, VFD220B43A, VFD300B43A, VFD370B43A	100TDS84C	N
VFD550B43A, VFD550B43C, VFD750B43A, VFD750B43C	200TDDS84C	N
VFD185B23A, VFD220B23A, VFD300B23A, VFD450B43A	150TDS84C	N
VFD370B23A	180TDS84C	N
VFD022B23B	20TDT1W4D	N
VFD022B21B	35DRT1W3C	N
VFD037B43B, VFD037B23B	26TDT1W4B4	N

Installation

All electrical equipment, including AC motor drives, will generate high-frequency/low-frequency noise and will interfere with peripheral equipment by radiation or conduction when in operation. By using an EMI filter with correct installation, much interference can be eliminated. It is recommended to use DELTA EMI filter to have the best interference elimination performance.

We assure that it can comply with following rules when AC motor drive and EMI filter are installed and wired according to user manual:

- **EN61000-6-4**
- **EN61800-3: 1996 + A11: 2000**
- **EN55011 (1991) Class A Group 1 (1st Environment, restricted distribution)**

General precaution

1. EMI filter and AC motor drive should be installed on the same metal plate.
2. Please install AC motor drive on footprint EMI filter or install EMI filter as close as possible to the AC motor drive.
3. Please wire as short as possible.
4. Metal plate should be grounded.
5. The cover of EMI filter and AC motor drive or grounding should be fixed on the metal plate and the contact area should be as large as possible.

Choose suitable motor cable and precautions

Improper installation and choice of motor cable will affect the performance of EMI filter. Be sure to observe the following precautions when selecting motor cable.

1. Use the cable with shielding (double shielding is the best).
2. The shielding on both ends of the motor cable should be grounded with the minimum length and maximum contact area.
3. Remove any paint on metal saddle for good ground contact with the plate and shielding.

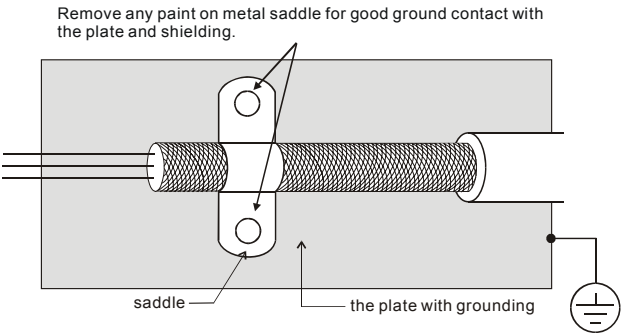

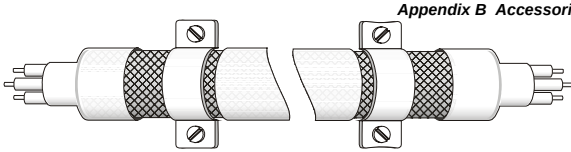

Saddle on both ends

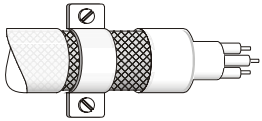

Saddle on one end

The length of motor cable

When motor is driven by an AC motor drive of PWM type, the motor terminals will experience surge voltages easily due to components conversion of AC motor drive and cable capacitance. When the motor cable is very long (especially for the 460V series), surge voltages may reduce insulation quality. To prevent this situation, please follow the rules below:

- Use a motor with enhanced insulation.
- Connect an output reactor (optional) to the output terminals of the AC motor drive
- The length of the cable between AC motor drive and motor should be as short as possible (10 to 20 m or less)
- For models 7.5hp/5.5kW and above:

Insulation level of motor	1000V	1300V	1600V
460VAC input voltage	66 ft (20m)	328 ft (100m)	1312 ft (400m)
230VAC input voltage	1312 ft (400m)	1312 ft (400m)	1312 ft (400m)

- For models 5hp/3.7kW and less:

Insulation level of motor	1000V	1300V	1600V
460VAC input voltage	66 ft (20m)	165 ft (50m)	165 ft (50m)
230VAC input voltage	328 ft (100m)	328 ft (100m)	328 ft (100m)

NOTE

When a thermal O/L relay protected by motor is used between AC motor drive and motor, it may malfunction (especially for 460V series), even if the length of motor cable is only 165 ft (50m) or less. To prevent it, please use AC reactor and/or lower the carrier frequency (Pr. 02-03 PWM carrier frequency).

NOTE

Never connect phase lead capacitors or surge absorbers to the output terminals of the AC motor drive.

- If the length is too long, the stray capacitance between cables will increase and may cause leakage current. It will activate the protection of over current, increase leakage current or not insure the correction of current display. The worst case is that AC motor drive may damage.
- If more than one motor is connected to the AC motor drive, the total wiring length is the sum of the wiring length from AC motor drive to each motor.

B.2.1 Dimensions

Dimensions are in millimeter and (inch)

Order P/N: RF015B21AA / RF022B43AA

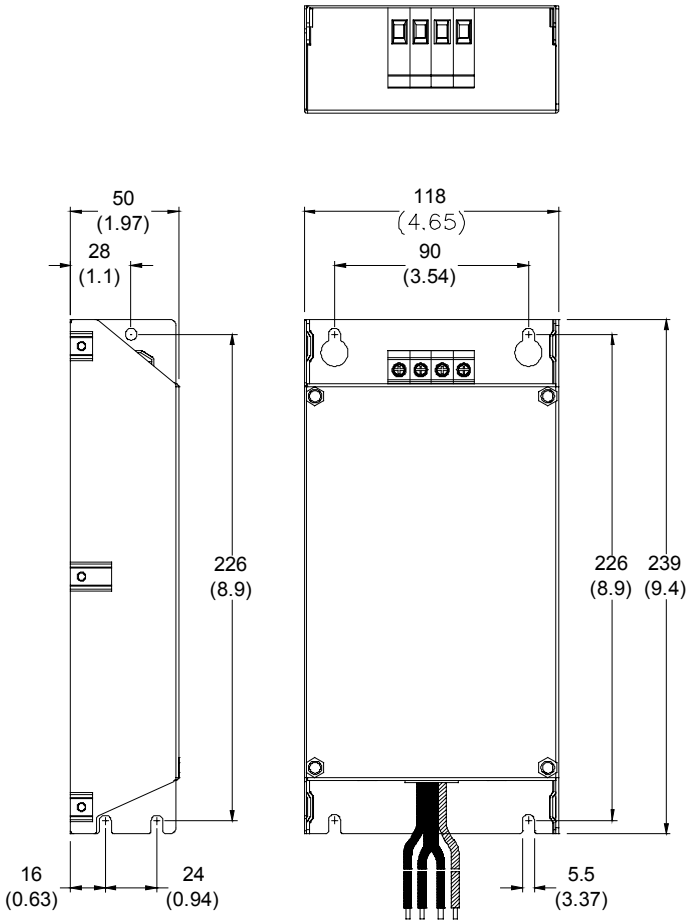

Order P/N: RF022B21BA / RF037B43BA

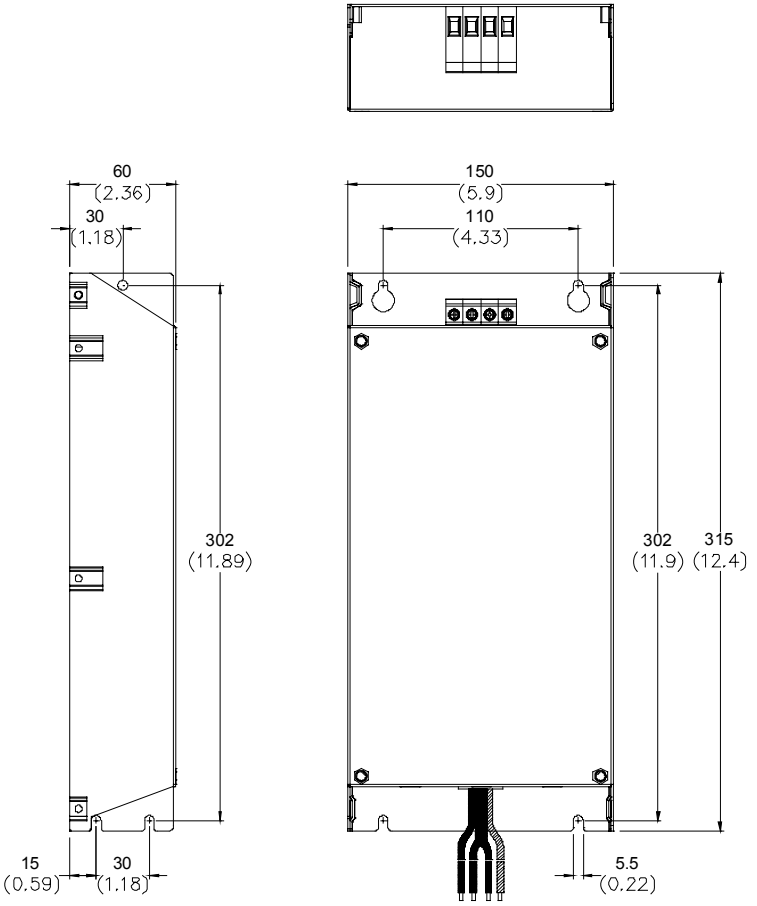

Order P/N: RF110B43CA

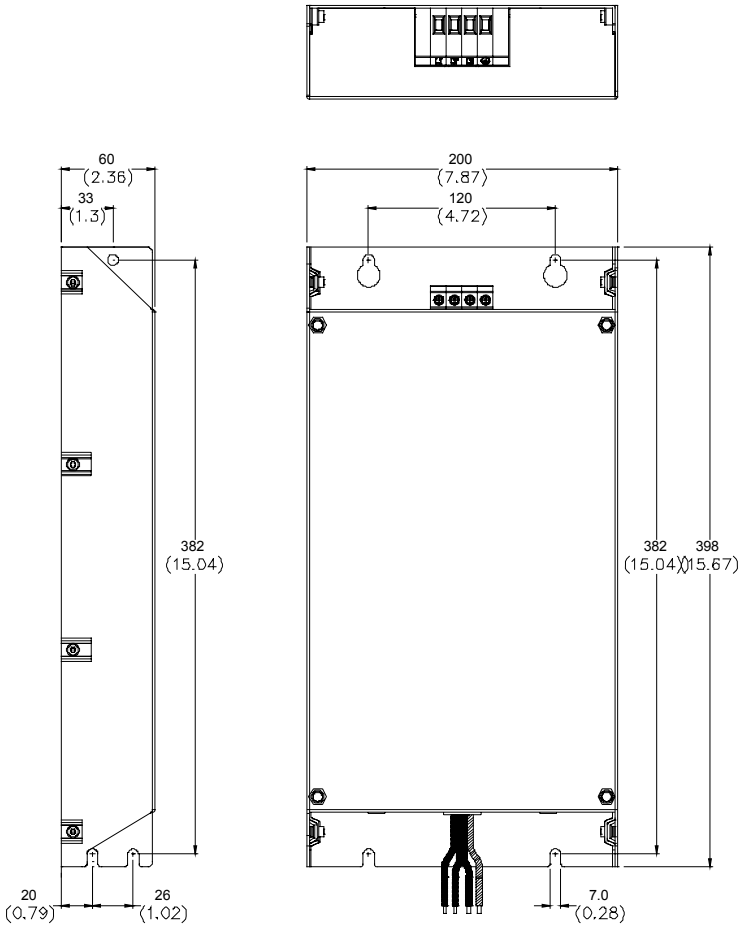

Order P/N: 10TDT1W4C

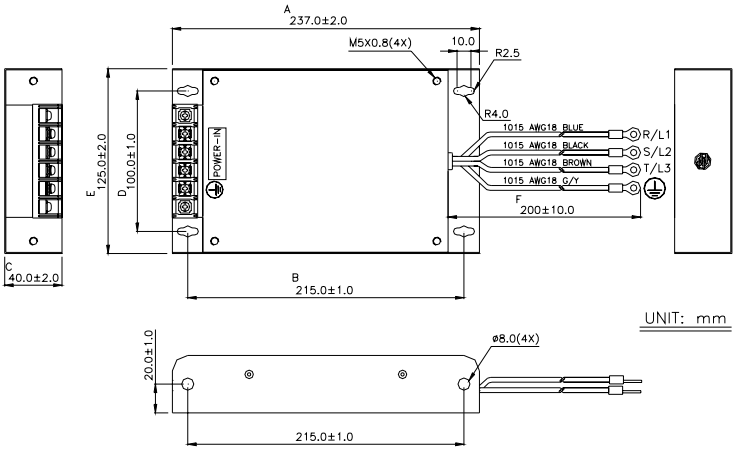

Order P/N: 26TDT1W4C

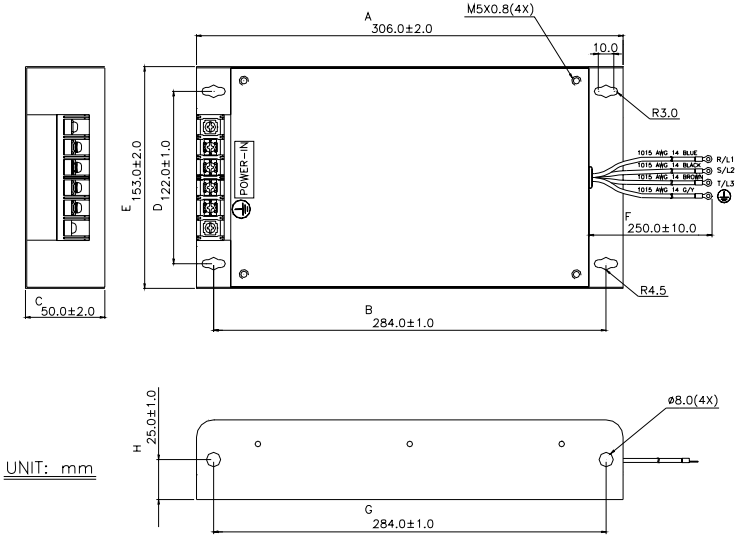

Order P/N: 50TDS4W4C

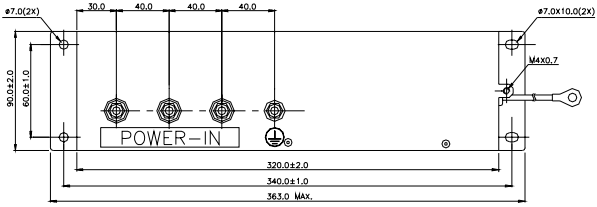

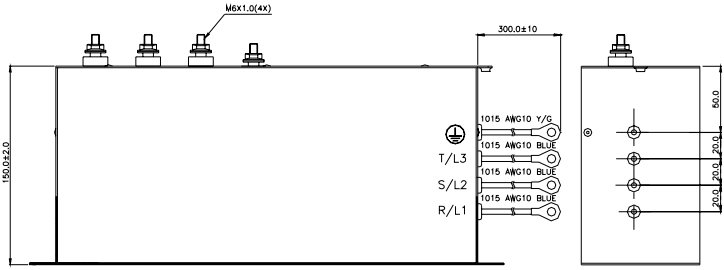

Order P/N: 100TDS84C

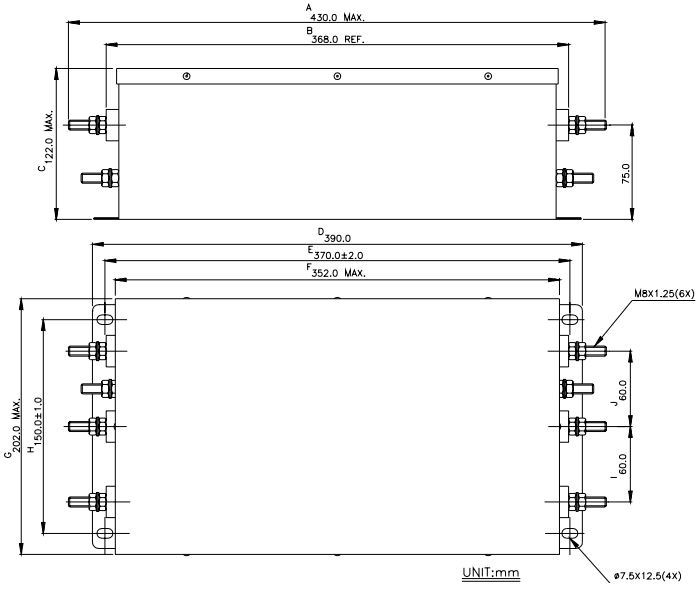

Order P/N: 200TDDS84C

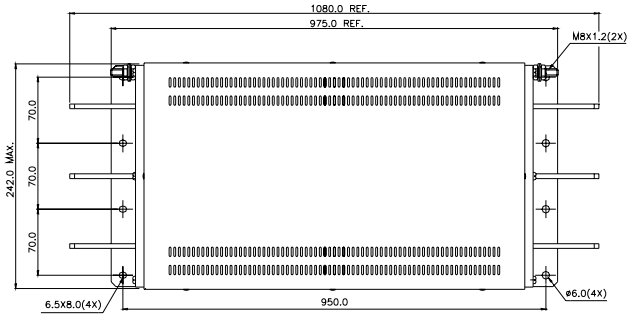

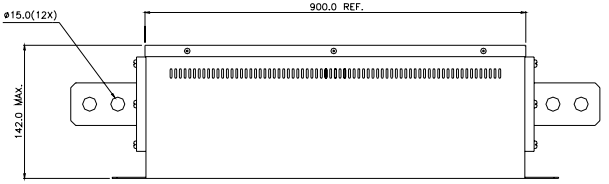

Order P/N: 150TDS84C

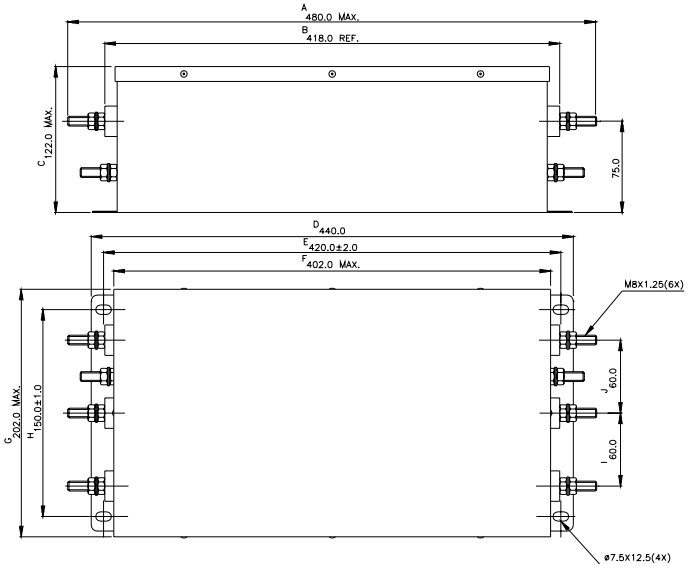

Order P/N: 180TDS84C

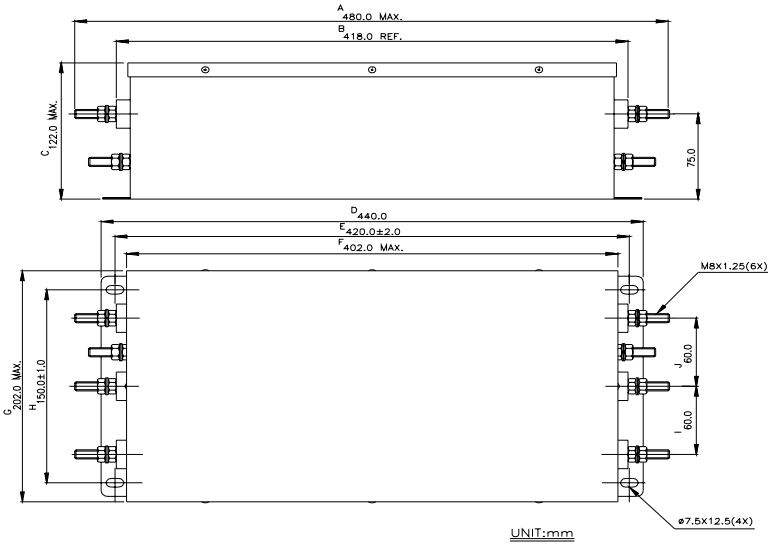

Order P/N: 20TDT1W4D

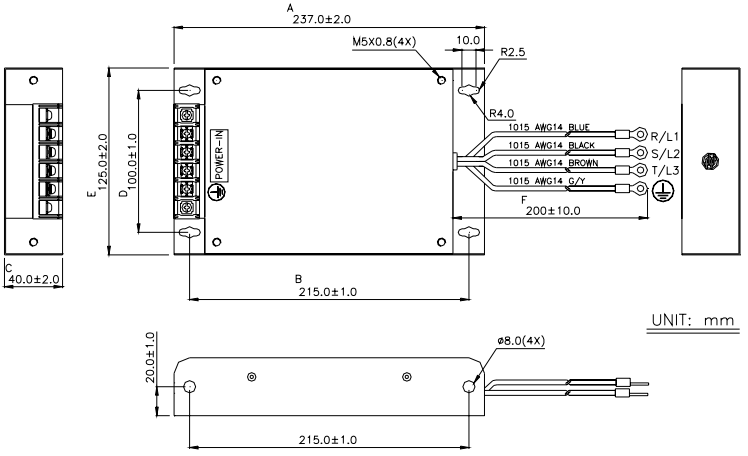

Order P/N: 26TDT1W4B4

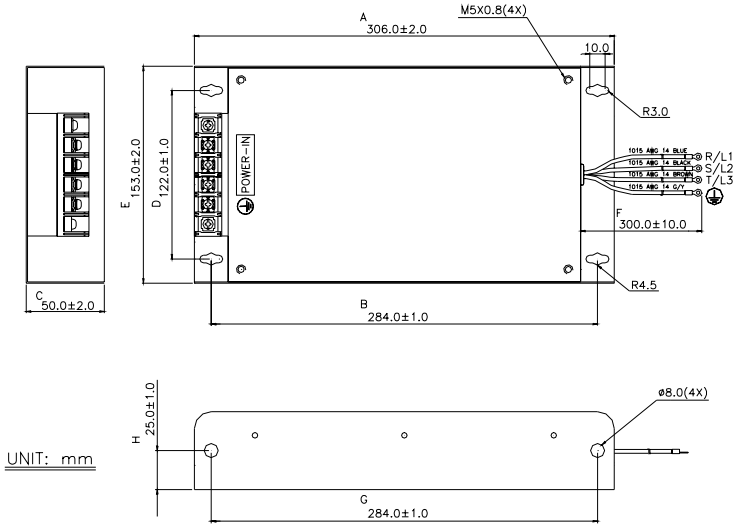

B.3 PG Card (for Encoder)

(Refer to Pr.10-10 to 10-15 of related parameter settings)

B.3.1 PG02 Installation

1. 1-2hp (0.75-1.5kW)

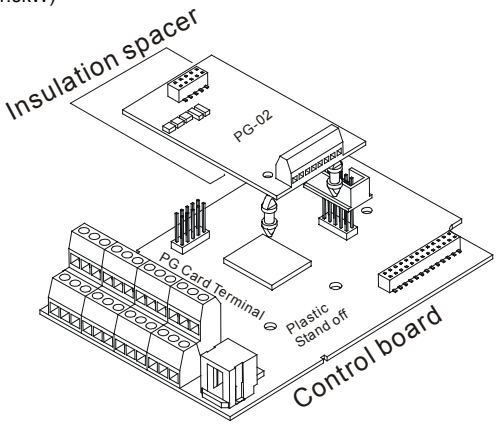

2. 3-5hp (2.2-3.7kW)

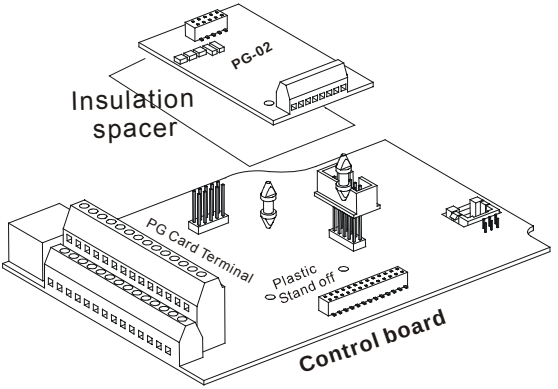

3. 7.5hp (5.5kW) and above

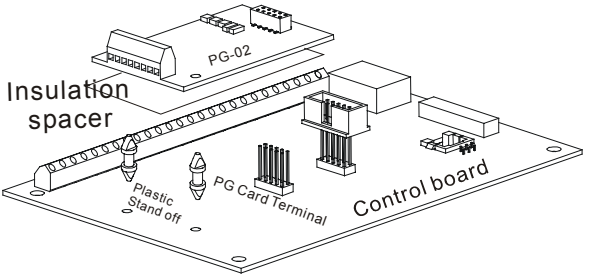

B.3.1.1 PG Card and Pulse Generator (Encoder)

1. Basic Wiring Diagram

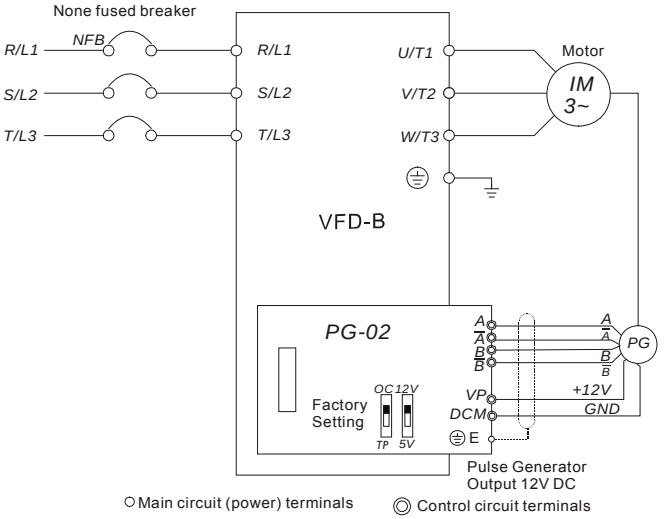

PG-02 and Pulse Generator Connections

2. Basic Wiring Diagram with RPM Meter Attached.

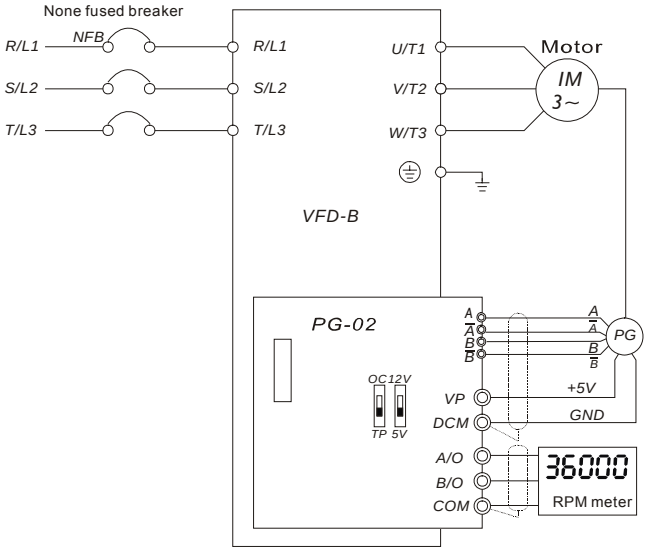

PG-02 and Pulse Generator Connections

3. When Pulse Generator (Encoder) is Open Collector type, please refer to following wiring.

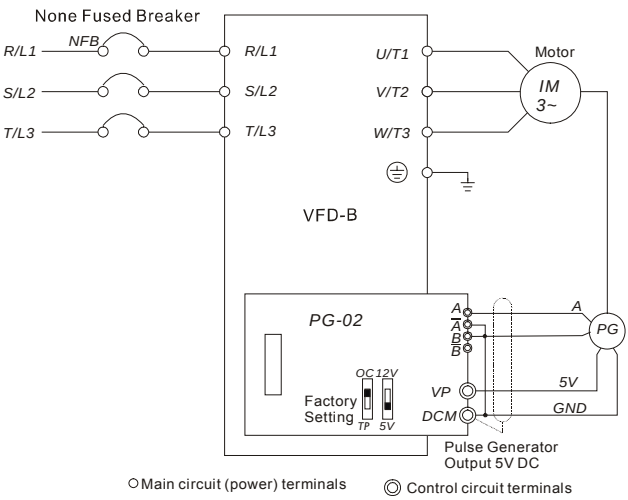

B.3.1.2 PG-02 Terminal Descriptions

1. Terminals

Terminal Symbols	Descriptions
VP	Power source of PG-02 (FSW1 can be switched to 12V or 5V) Output Voltage: (+12VDC ±5% 200mA) or (+5VDC ±2% 400mA)
DCM	Power source (VP) and input signal (A, B) common
A, $\overline{A}$, B, $\overline{B}$	Input signal from Pulse Generator. Input type is selected by FSW2. Please See section 3.4. Maximum 500KP/sec
A/O, B/O	PG-02 output signal for use with RPM Meter. (Open Collector) Maximum DC24V 100mA
COM	PG-02 output signal (A/O, B/O) common.

2. Wiring Notes

The control, power supply and motor leads must be laid separately. They must not be fed through the same cable conduit / trunk.

a. Please use a shielded cable to prevent interference. Do not run control wires parallel to any high voltage AC power line (220 V and above).

b. Connect shielded wire to DCM only.

c. Recommended wire size 0.21 to 0.81mm^2 (AWG24 to AWG18).

d. Wire length:

Types of Pulse Generators	Maximum Wire Length	Wire Gauge
Output Voltage	50m	1.25mm^2 (AWG16) or above
Open Collector	50m	
Line Driver	300m	
Complementary	70m	

3. Control Terminals Block Designations.

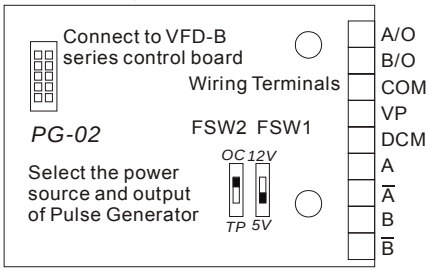

4. Types of Pulse Generators (Encoders)

Types of Pulse Generators		FSW1 and FSW2 Switches	
		5V	12V
Output Voltage	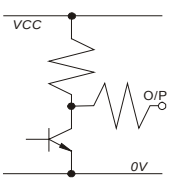		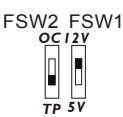
Open Collector	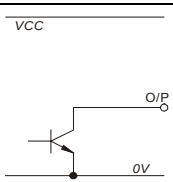		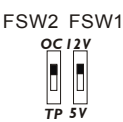
Line Driver	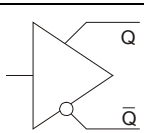		
Complimentary	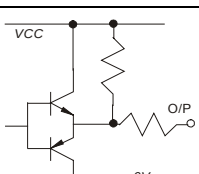		

B.3.2 PG03

B.3.2.1 Installation

1. 1-5hp (0.75-3.7kW)

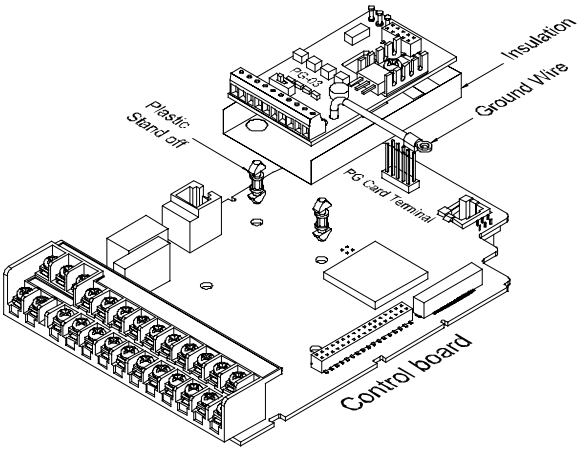

2. 7.5hp (5.5kW) and above

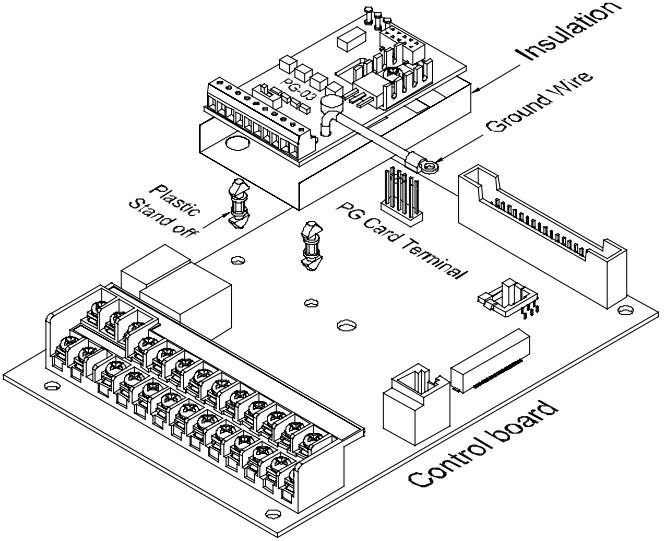

B.3.2.2 PG Card and Pulse Generator (Encoder)

1. Basic wiring diagram

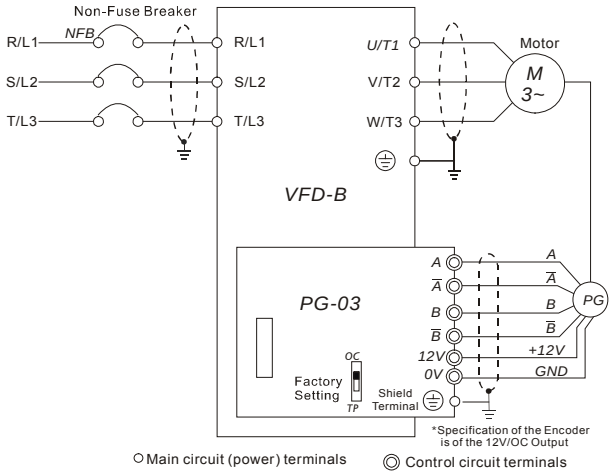

Connection between PG-03 and the Encoder

2. Connect Externally with the Encoder of 12V Power Supply and Output Signals to Additional Tachometer

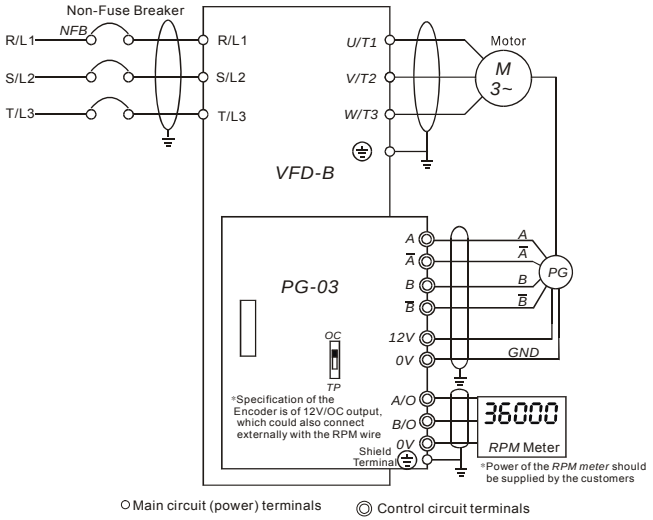

Connection between PG-03 and the Encoder

B.3.2.3 PG-03 Terminal Descriptions

1. Terminals

Terminal Symbols	Descriptions
+12V	Power Supply of the Encoder: +12V Output Voltage: +12V±5% 200mA
0V	Common point for the power supply and the signal
A, $\overline{A}$, B, $\overline{B}$	Encoder signal input (select Encoder output type from FSW2) Both single-phase input and two-phase input available Maximum: 500KP/Sec
A/O, B/O	The Encoder signal output Maximum: DC24V 50mA
⏚	Common point for signal grounding

2. Wiring Notes
   a) Please use a shield cable to prevent interference. Do not run control wire parallel to any high voltage AC power line (220V and up).
   b) Connect shielded wire to ⏚ E only.
   c) Recommended wire size 0.21 to 0.81mm^2 (AWG24 to AWG18).
   d) Wire length:

The Output Types of the Encoder	Maximum Wire Length	Wire Gauge
Output Voltage	50m	1.25mm^2 (AWG16) or above
Open Collector	50m	
Line Driver	300m	
Complementary	70m	

3. Control Terminals Block Designations.

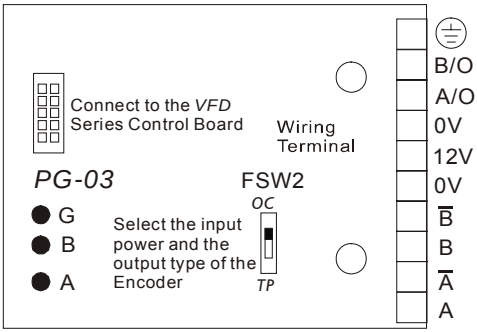

4. Encoder types

Output Types of the Encoder		FSW2 Switch
Output Voltage	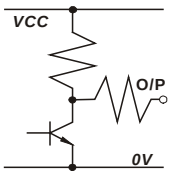	
Open Collector	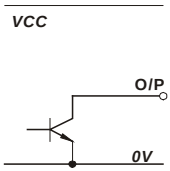	
Line Driver	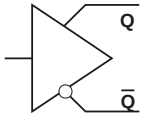	
Complimentary	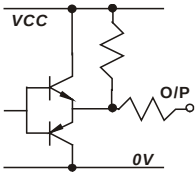	

B.4 Remote Controller RC-01

Dimensions are in millimeter

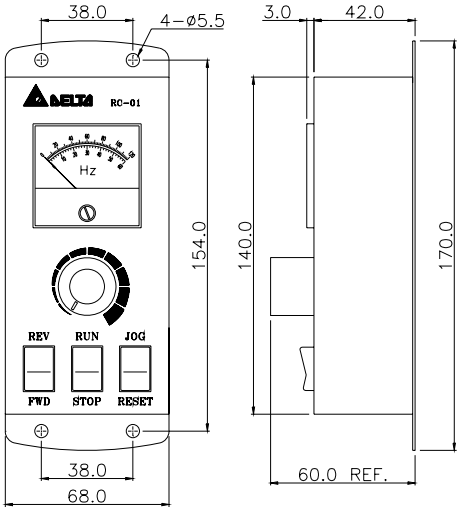

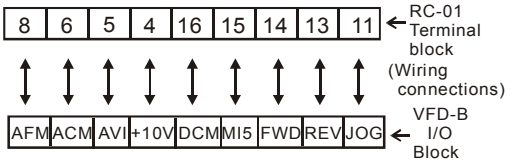

VFD-B Programming:

Pr.02-00 set to 1

Pr.02-01 set to 1 (external controls)

Pr.02-05 set to 1 (setting Run/Stop and Fwd/Rev controls)

Pr.04-08 (MI5) set to 8 (External reset)

B.5 Remote Panel Adapter (RPA 01)

Remote panel adapter for VFDPU01

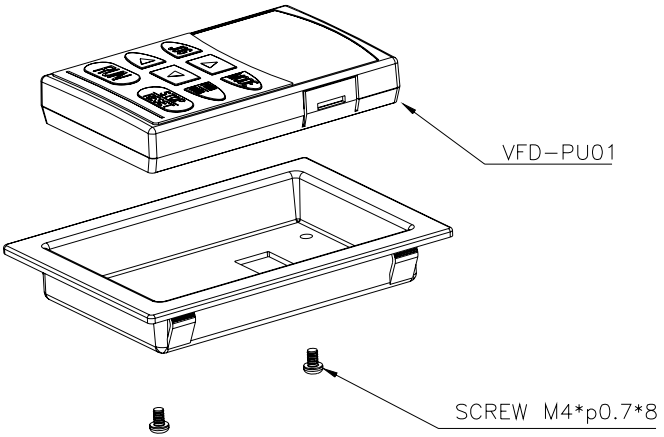

Mounting hole dimensions (Dimensions are in millimeter)

Following is the mounting hole dimension of the plate for RPA01. Please choose the applicable one from below, depending on the plate thickness (t).

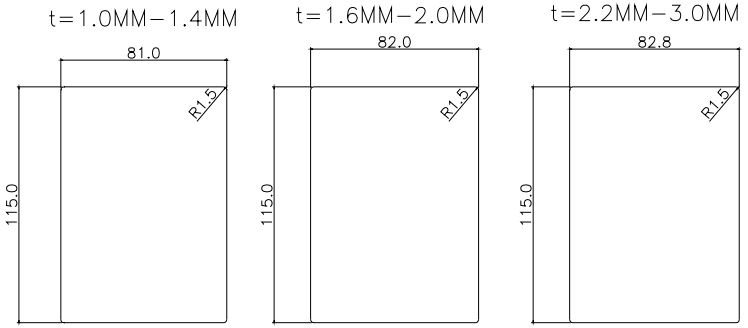

B.6 AC Reactor

B.6.1 AC Input Reactor Recommended Value

230V, 50/60Hz, 1-Phase

kW	HP	Fundamental Amps	Max. continuous Amps	Inductance (mH)
				3~5% impedance
0.75	1	8	12	1.5
1.5	2	12	18	1.25
2.2	3	18	27	0.8

460V, 50/60Hz, 3-Phase

kW	HP	Fundamental Amps	Max. continuous Amps	Inductance (mH)	
				3% impedance	**5% impedance**
0.75	1	4	6	9	12
1.5	2	4	6	6.5	9
2.2	3	8	12	5	7.5
3.7	5	8	12	3	5
5.5	7.5	12	18	2.5	4.2
7.5	10	18	27	1.5	2.5
11	15	25	37.5	1.2	2
15	20	35	52.5	0.8	1.2
18.5	25	35	52.5	0.8	1.2
22	30	45	67.5	0.7	1.2
30	40	55	82.5	0.5	0.85
37	50	80	120	0.4	0.7
45	60	80	120	0.4	0.7
55	75	100	150	0.3	0.45
75	100	130	195	0.2	0.3

575V, 50/60Hz, 3-Phase

kW	HP	Fundamental Amps	Max. continuous Amps	Inductance (mH)	
				3% impedance	**5% impedance**
0.75	1	2	3	20	32
1.5	2	4	6	9	12

kW	HP	Fundamental Amps	Max. continuous Amps	Inductance (mH)	
				3% impedance	**5% impedance**
2.2	3	4	6	9	12
3.7	5	8	12	5	7.5
5.5	7.5	8	12	3	5
7.5	10	12	18	2.5	4.2
11	15	18	27	1.5	2.5
15	20	25	37.5	1.2	1.8
18.5	25	25	37.5	1.2	1.8
22	30	35	52.5	0.8	1.2
30	40	45	67.5	0.7	1.2
37	50	55	82.5	0.5	0.85
45	60	80	120	0.4	0.7
55	75	80	120	0.4	0.7
75	100	100	150	0.3	0.45

B.6.2 AC Output Reactor Recommended Value

230V, 50/60Hz, 3-Phase

kW	HP	Fundamental Amps	Max. continuous Amps	Inductance (mH)	
				3% impedance	**5% impedance**
0.75	1	8	12	3	5
1.5	2	8	12	1.5	3
2.2	3	12	18	1.25	2.5
3.7	5	18	27	0.8	1.5
5.5	7.5	25	37.5	0.5	1.2
7.5	10	35	52.5	0.4	0.8
11	15	55	82.5	0.25	0.5
15	20	80	120	0.2	0.4
18.5	25	80	120	0.2	0.4
22	30	100	150	0.15	0.3
30	40	130	195	0.1	0.2
37	50	160	240	0.075	0.15

460V, 50/60Hz, 3-Phase

kW	HP	Fundamental Amps	Max. continuous Amps	Inductance (mH)	
				3% impedance	**5% impedance**
0.75	1	4	6	9	12
1.5	2	4	6	6.5	9
2.2	3	8	12	5	7.5
3.7	5	12	18	2.5	4.2
5.5	7.5	18	27	1.5	2.5
7.5	10	18	27	1.5	2.5
11	15	25	37.5	1.2	2
15	20	35	52.5	0.8	1.2
18.5	25	45	67.5	0.7	1.2
22	30	45	67.5	0.7	1.2
30	40	80	120	0.4	0.7
37	50	80	120	0.4	0.7
45	60	100	150	0.3	0.45
55	75	130	195	0.2	0.3
75	100	160	240	0.15	0.23

575V, 50/60Hz, 3-Phase

kW	HP	Fundamental Amps	Max. continuous Amps	Inductance (mH)	
				3% impedance	**5% impedance**
0.75	1	2	3	20	32
1.5	2	4	6	9	12
2.2	3	4	6	9	12
3.7	5	8	12	5	7.5
5.5	7.5	8	12	3	5
7.5	10	12	18	2.5	4.2
11	15	18	27	1.5	2.5
15	20	25	37.5	1.2	1.8

kW	HP	Fundamental Amps	Max. continuous Amps	Inductance (mH)	
				3% impedance	**5% impedance**
18.5	25	25	37.5	1.2	1.8
22	30	35	52.5	0.8	1.2
30	40	45	67.5	0.7	1.2
37	50	55	82.5	0.5	0.85
45	60	80	120	0.4	0.7
55	75	80	120	0.4	0.7
75	100	100	150	0.3	0.45

B.6.3 Applications for AC Reactor

Connected in input circuit

Application 1	Question
When more than one AC motor drive is connected to the same power, one of them is ON during operation.	When applying to one of the AC motor drive, the charge current of capacity may cause voltage ripple. The AC motor drive may damage when over current occurs during operation.

Correct wiring

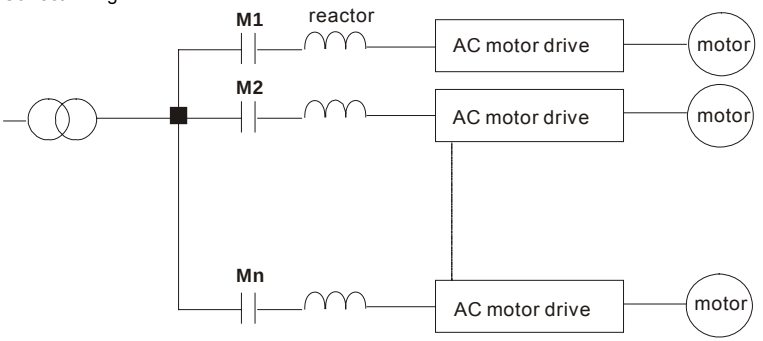

Application 2	Question
Silicon rectifier and AC motor drive is connected to the same power.	Surges will be generated at the instant of silicon rectifier switching on/off. These surges may damage the mains circuit.

Correct wiring

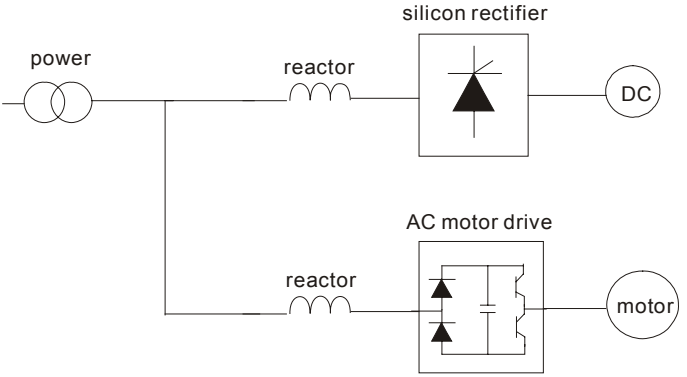

Application 3	Question
Used to improve the input power factor, to reduce harmonics and provide protection from AC line disturbances~~,~~ (surges, switching spikes, short interruptions, etc.). AC line reactor should be installed when the power supply capacity is 500kVA or more and exceeds 6 times the inverter capacity, or the mains wiring distance $\leq$ 10m.	When power capacity is too large, line impedance will be small and the charge current will be too large. That may damage AC motor drive due to higher rectifier temperature.

Correct wiring

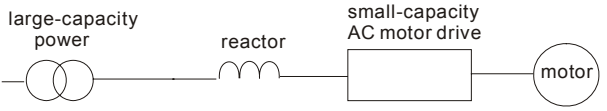

B.7 Zero Phase Reactor (RF220X00A)

Dimensions are in millimeter and (inch)

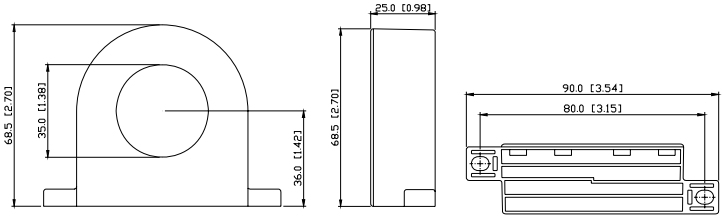

	Motor HP	Motor kW	Qty.	Recommended Wire Size (mm^2)	Wiring Method
230 V Series	1/4	0.2	1	0.5 - 5.5	Diagram A
	1/2	0.5			
	1	0.75			
	2	1.5			
	3	2.2		3.5 - 5.5	
	5	3.7		5.5	
	7.5	5.5	4	8	Diagram B
	10	7.5			
	15	11		22	
	20	15		30	
	25	18.5			
	30	22		38	
	40	30		38 - 100	
	50	37			
460 V Series	1/4	0.2	1	0.5 - 5.5	Diagram A
	1/2	0.5			
	1	0.75			
	2	1.5			
	3	2.2			
	5	3.7			
	7.5	5.5		3.5 - 5.5	
	10	7.5		5.5	
	15	11	4	8 - 14	Diagram B
	20	15			
	25	18.5		14	
	30	22		22	
	40	30			
	50	37		30	
	60	45		50	
	75	55		38 - 100	
	100	75			
575V	1	0.75	1	0.8 – 5.3	Diagram A
	2	1.5			
	3	2.2			
	5	3.7			

	Motor HP	Motor kW	Qty.	Recommended Wire Size	Wiring Method
575V	7.5	5.5	1	3.3 – 5.3	Diagram B
	10	7.5			
	15	11			
	20	15	4	8.4 – 33.3	
	25	18.5			
	30	22			
	40	30		13.3 – 33.6	
	50	37			
	60	45			
	75	55		42.4 - 85	
	100	75			

Diagram A

Please wind each wire 4 times around the core. The reactor must be put at inverter output as close as possible.

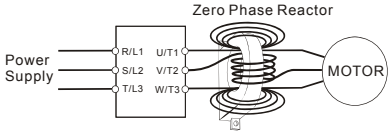

Diagram B

Please put all wires through 4 cores in series without winding.

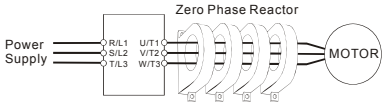

B.8 DC Choke Recommended Values

230V DC Choke

Input voltage	kW	HP	DC Amps	Inductance (mh)
230Vac 50/60Hz 3-Phase	0.75	1	9	7.50
	1.5	2	12	4.00
	2.2	3	18	2.75
	3.7	5	25	1.75
	5.5	7.5	32	0.85
	7.5	10	40	0.75
	11	15	62	0.61
	15	20	92	0.60
	18.5	25	110	0.30
	22	30	125	0.22
	30	40	--	Built-in
	37	50	--	Built-in
230Vac 50/60Hz 1-Phase	0.75	1	9	12.00
	1.5	2	12	8.00
	2.2	3	18	6.00

460V DC Choke

Input voltage	kW	HP	DC Amps	Inductance (mh)
460Vac 50/60Hz 3-Phase	0.75	1	4	25.00
	1.5	2	9	11.50
	2.2	3	9	11.50
	3.7	5	12	6.00
	5.5	7.5	18	3.75
	7.5	10	25	4.00
	11	15	32	2.68
	15	20	50	2.00
	18.5	25	62	1.20
	22	30	80	1.25
	30	40	92	Built-in
	37	50	110	Built-in
	45	60	125	Built-in
	55	75	200	Built-in
	75	100	240	Built-in

575V DC Choke

Input voltage	kW	HP	DC Amps	Inductance (mh)
575Vac 50/60Hz 3-Phase	0.75	1	4	25
	1.5	2	9	11.5
	2.2	3	9	11.5
	3.7	5	12	6
	5.5	7.5	18	6
	7.5	10	25	4
	11	15	32	2.68
	15	20	40	2.5
	18.5	25	40	2.5
	22	30	50	2
	30	40	--	Built-in
	37	50	--	Built-in
	45	60	--	Built-in
	55	75	--	Built-in
	75	100	--	Built-in

B.9 Non-fuse Circuit Breaker Chart

Per UL 508C, paragraph 45.8.4, part a:

1. For 1-phase drives, the current rating of the breaker shall be 4 times maximum input current rating.
2. For 3-phase drives, the current rating of the breaker shall be 4 times maximum output current rating.

(Refer to Appendix A for rated input/output current)

1-phase		3-phase			
Model	**Recommended non-fuse breaker (A)**	**Model**	**Recommended non-fuse breaker (A)**	**Model**	**Recommended non-fuse breaker (A)**
VFD007B21A	20	VFD007B23A	10	VFD220B23A	175
VFD015B21A/B	30	VFD007B43A	5	VFD220B43A	100
VFD022B21A	50	VFD007B53A	5	VFD220B53A	60
		VFD015B23A/B	15	VFD300B23A	225
		VFD015B43A	10	VFD300B43A	125
		VFD015B53A	5	VFD300B53A	75
		VFD022B23A	30	VFD370B23A	250
		VFD022B43B	15	VFD370B43A	150
		VFD022B53A	10	VFD370B53A	100
		VFD037B23A	40	VFD450B43A	175
		VFD037B43A	20	VFD450B53A	125
		VFD037B53A	15	VFD550B43A/C	250
		VFD055B23A	50	VFD550B53A	150
		VFD055B43A	30	VFD750B43A/C	300
		VFD055B53A	20	VFD750B53A	175
		VFD075B23A	60		
		VFD075B43A	40		
		VFD075B53A	30		
		VFD110B23A	100		
		VFD110B43A	50		
		VFD110B53A	40		
		VFD150B23A	125		
		VFD150B43A	60		
		VFD150B53A	40		
		VFD185B23A	150		
		VFD185B43A	75		
		VFD185B53A	50		

B.10 Fuse Specification Chart

Smaller fuses than those shown in the table are permitted.

Model	I (A) Input	I (A) Output	Line Fuse	
			I (A)	Bussmann P/N
VFD007B21A	11.9	5.0	20	JJN-20
VFD007B23A	5.7	5.0	10	JJN-10
VFD007B43A	3.2	2.7	5	JJS-5
VFD007B53A	1.2	1.7	3	JJS-3
VFD015B21A/B	15.3	7.0	30	JJN-30
VFD015B23A/B	7.6	7.0	15	JJN-15
VFD015B43A	4.3	4.2	10	JJS-10
VFD015B53A	3.1	3.5	5	JJS-6
VFD022B21A	22.0	11	50	JJN-50
VFD022B23A	15.5	11	30	JJN-30
VFD022B43B	5.9	5.5	15	JJS-15
VFD022B53A	4.0	4.5	10	JJS-10
VFD037B23A	20.6	17	40	JJN-40
VFD037B43A	11.2	8.5	20	JJS-20
VFD037B53A	8.3	6.7	15	JJS-15
VFD055B23A	26	25	50	JJN-50
VFD055B43A	14	13	30	JJS-30
VFD055B53A	10.3	10	20	JJS-20
VFD075B23A	34	33	60	JJN-60
VFD075B43A	19	18	40	JJS-40
VFD075B53A	13.8	13.5	25	JJS-25
VFD110B23A	50	49	100	JJN-100
VFD110B43A	25	24	50	JJS-50
VFD110B53A	18.2	19	35	JJS-35
VFD150B23A	60	65	125	JJN-125
VFD150B43A	32	32	60	JJS-60
VFD150B53A	22	22	40	JJS-40
VFD185B23A	75	75	150	JJN-150
VFD185B43A	39	38	75	JJS-70
VFD185B53A	27.7	27	50	JJS-50
VFD220B23A	90	90	175	JJN-175
VFD220B43A	49	45	100	JJS-100
VFD220B53A	32	34	60	JJS-60
VFD300B23A	110	120	225	JJN-225
VFD300B43A	60	60	125	JJS-125
VFD300B53A	41	41	75	JJS-70
VFD370B23A	142	145	250	JJN-250
VFD370B43A	63	73	150	JJS-150
VFD370B53A	52	52	100	JJS-100
VFD450B43A	90	91	175	JJS-175
VFD450B53A	62	62	125	JJS-125
VFD550B43A/C	130	110	250	JJS-250
VFD550B53A	74	80	150	JJS-150
VFD750B43A/C	160	150	300	JJS-300
VFD750B53A	91	100	175	JJS-175

B.11 PU06

B.11.1 Description of the Digital keypad VFD-PU06

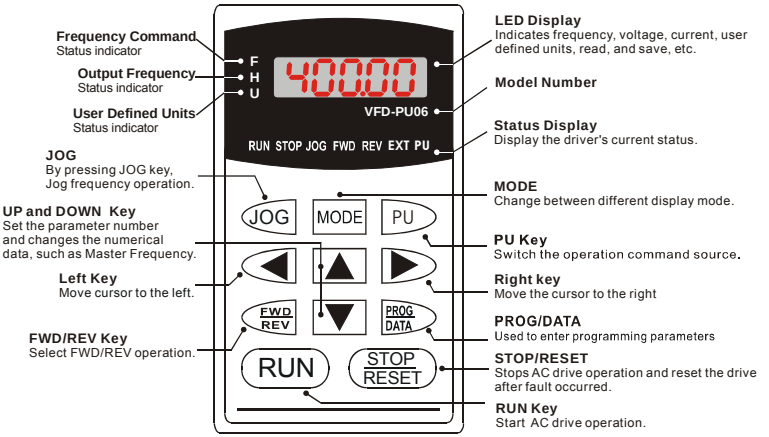

B.11.2 Explanation of Display Message

Display Message	Descriptions
F 60.00	The AC motor drive Master Frequency Command.
H 50.00	The Actual Operation Frequency present at terminals U, V, and W.
U 180.00	The custom unit (u)
A 5.0	The output current present at terminals U, V, and W.
rEAd0	Press ▲ to change the mode to READ. Press PROG/DATA for about 2 sec or until it's flashing, read the parameters of AC drive to the digital keypad PU06. It can read 4 groups of parameters to PU06. (read 0 – read 3)
SAvE-	Press ▲ to change the mode to SAVE. Press PROG/DATA for about 2 sec or until it's flashing, then write the parameters from the digital keypad PU06 to AC drive. If it has saved, it will show the type of AC motor drive.

Display Message	Descriptions
06-00	The specified parameter setting.
10	The actual value stored in the specified parameter.
E.F.	External Fault
-End-	"End" displays for approximately 1 second if the entered input data have been accepted. After a parameter value has been set, the new value is automatically stored in memory. To modify an entry, use the ▲ or ▼ keys.
-Err-	"Err" displays if the input is invalid.
CE-10	Communication Error. Please check the AC motor drive user manual (Chapter 5, Group 9 Communication Parameter) for more details.

B.11.3 Operation Flow Chart

VFD-PU06 Operation Flow Chart

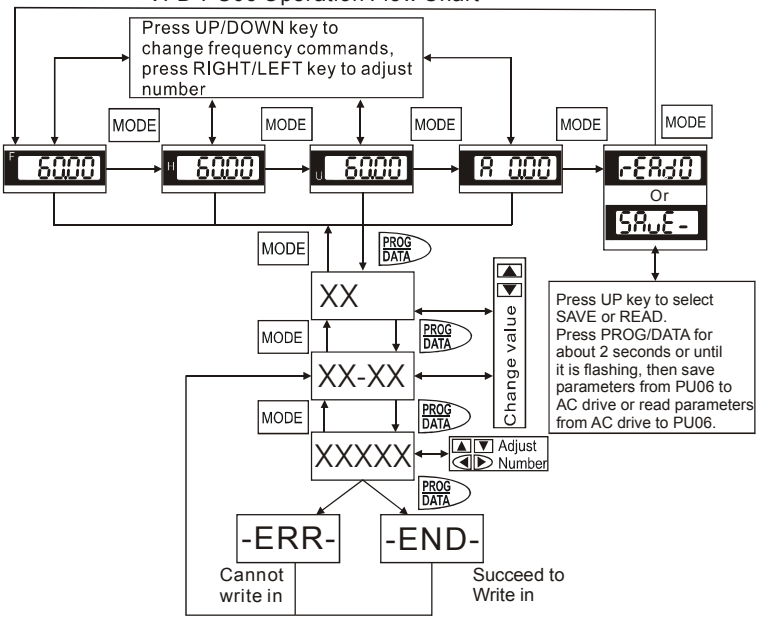

This page intentionally left blank.

Appendix C How to Select the Right AC Motor Drive

The choice of the right AC motor drive for the application is very important and has great influence on its lifetime. If the capacity of AC motor drive is too large, it cannot offer complete protection to the motor and motor maybe damaged. If the capacity of AC motor drive is too small, it cannot offer the required performance and the AC motor drive maybe damaged due to overloading.

But by simply selecting the AC motor drive of the same capacity as the motor, user application requirements cannot be met completely. Therefore, a designer should consider all the conditions, including load type, load speed, load characteristic, operation method, rated output, rated speed, power and the change of load capacity. The following table lists the factors you need to consider, depending on your requirements.

Item		Related Specification			
		Speed and torque characteristics	Time ratings	Overload capacity	Starting torque
Load type	Friction load and weight load Liquid (viscous) load Inertia load Load with power transmission	●			●
Load speed and torque characteristics	Constant torque Constant output Decreasing torque Decreasing output	●	●		
Load characteristics	Constant load Shock load Repetitive load High starting torque Low starting torque	●	●	●	●
Continuous operation, Short-time operation Long-time operation at medium/low speeds			●	●	
Maximum output current (instantaneous) Constant output current (continuous)		●		●	
Maximum frequency, Base frequency		●			
Power supply transformer capacity or percentage impedance Voltage fluctuations and unbalance Number of phases, single phase protection Frequency				●	●
Mechanical friction, losses in wiring				●	●
Duty cycle modification			●		

C.1 Capacity Formulas

1. When one AC motor drive operates one motor

The starting capacity should be less than 1.5x rated capacity of AC motor drive

The starting capacity=

$$\frac{k \times N}{973 \times \eta \times \cos\varphi}\left(T_L + \frac{GD^2}{375} \times \frac{N}{t_A}\right) \le 1.5 \times the_capacity_of_AC_motor_drive(kVA)$$

2. When one AC motor drive operates more than one motor

2.1 The starting capacity should be less than the rated capacity of AC motor drive

- *Acceleration time ≦60 seconds*

The starting capacity=

$$\frac{k \times N}{\eta \times \cos\varphi}\left[n_T + n_S(k_{S-1})\right] = P_{C1}\left[1 + \frac{n_s}{n_T}(k_{S-1})\right] \le 1.5 \times the_capacity_of_AC_motor_drive(kVA)$$

- *Acceleration time ≧60 seconds*

The starting capacity=

$$\frac{k \times N}{\eta \times \cos\varphi}\left[n_T + n_S(k_{S-1})\right] = P_{C1}\left[1 + \frac{n_s}{n_T}(k_{S-1})\right] \le the_capacity_of_AC_motor_drive(kVA)$$

2.2 The current should be less than the rated current of AC motor drive(A)

- *Acceleration time ≦60 seconds*

$$n_T + I_M\left[1 + \frac{n_S}{n_T}(k_S - 1)\right] \le 1.5 \times the_rated_current_of_AC_motor_drive(A)$$

- *Acceleration time ≧60 seconds*

$$n_T + I_M\left[1 + \frac{n_S}{n_T}(k_S - 1)\right] \le the_rated_current_of_AC_motor_drive(A)$$

2.3 When it is running continuously

- The *requirement* of load capacity should be less than the capacity of AC motor drive(kVA)

  The requirement of load capacity=

$$\frac{k \times P_M}{\eta \times \cos\varphi} \le the_capacity_of_AC_motor_drive(kVA)$$

- *The motor capacity should be less than the capacity of AC motor drive*

$$k \times \sqrt{3} \times V_M \times I_M \times 10^{-3} \le the_capacity_of_AC_motor_drive(kVA)$$

- *The current should be less than the rated current of AC motor drive(A)*

$$k \times I_M \le the_rated_current_of_AC_motor_drive(A)$$

Symbol explanation

P_M	: Motor shaft output for load (kW)
η	: Motor efficiency (normally, approx. 0.85)
$\cos\varphi$	: Motor power factor (normally, approx. 0.75)
V_M	: Motor rated voltage(V)
I_M	: Motor rated current(A), for commercial power
k	: Correction factor calculated from current distortion factor (1.05 - 1.1, depending on PWM method)
P_{C1}	: Continuous motor capacity (kVA)
k_S	: Starting current/rated current of motor
n_T	: Number of motors in parallel
n_S	: Number of simultaneously started motors
GD^2	: Total inertia (GD^2) calculated back to motor shaft (kg m^2)
T_L	: Load torque
t_A	: Motor acceleration time
N	: Motor speed

C.2 General Precaution

Selection Note

1. When the AC Motor Drive is connected directly to a large-capacity power transformer (600kVA or above) or when a phase lead capacitor is switched, excess peak currents may occur in the power input circuit and the converter section may be damaged. To avoid this, use an AC input reactor (optional) before AC Motor Drive mains input to reduce the current and improve the input power efficiency.
2. When a special motor is used or more than one motor is driven in parallel with a single AC Motor Drive, select the AC Motor Drive current ≥1.25x(Sum of the motor rated currents).
3. The starting and accel./decel. characteristics of a motor are limited by the rated current and the overload protection of the AC Motor Drive. Compared to running the motor D.O.L. (Direct On-Line), a lower starting torque output with AC Motor Drive can be expected. If higher starting torque is required (such as for elevators, mixers, tooling machines, etc.) use an AC Motor Drive of higher capacity or increase the capacities for both the motor and the AC Motor Drive.
4. When an error occurs on the drive, a protective circuit will be activated and the AC Motor Drive output is turned off. Then the motor will coast to stop. For an emergency stop, an external mechanical brake is needed to quickly stop the motor.

Parameter Settings Note

1. The AC Motor Drive can be driven at an output frequency up to 400Hz (less for some models) with the digital keypad. Setting errors may create a dangerous situation. For safety, the use of the upper limit frequency function is strongly recommended.
2. High DC braking operating voltages and long operation time (at low frequencies) may cause overheating of the motor. In that case, forced external motor cooling is recommended.
3. Motor accel./decel. time is determined by motor rated torque, load torque, and load inertia.

4. If the stall prevention function is activated, the accel./decel. time is automatically extended to a length that the AC Motor Drive can handle. If the motor needs to decelerate within a certain time with high load inertia that can't be handled by the AC Motor Drive in the required time, either use an external braking resistor and/or brake unit, depending on the model, (to shorten deceleration time only) or increase the capacity for both the motor and the AC Motor Drive.

C.3 How to Choose a Suitable Motor

Standard motor

When using the AC Motor Drive to operate a standard 3-phase induction motor, take the following precautions:

1. The energy loss is greater than for an inverter duty motor.
2. Avoid running motor at low speed for a long time. Under this condition, the motor temperature may rise above the motor rating due to limited airflow produced by the motor's fan. Consider external forced motor cooling.
3. When the standard motor operates at low speed for long time, the output load must be decreased.
4. The load tolerance of a standard motor is as follows:

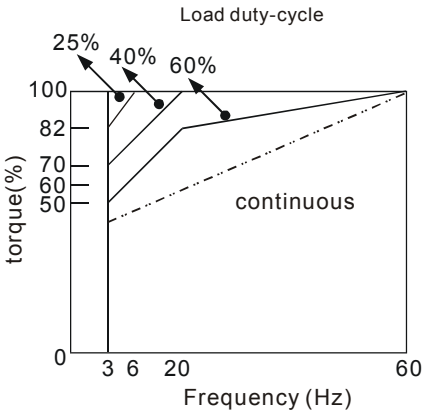

5. If 100% continuous torque is required at low speed, it may be necessary to use a special inverter duty motor.
6. Motor dynamic balance and rotor endurance should be considered once the operating speed exceeds the rated speed (60Hz) of a standard motor.
7. Motor torque characteristics vary when an AC Motor Drive instead of commercial power supply drives the motor. Check the load torque characteristics of the machine to be connected.
8. Because of the high carrier frequency PWM control of the VFD series, pay attention to the following motor vibration problems:
   - *Resonant mechanical vibration: anti-vibration (damping) rubbers should be used to mount equipment that runs at varying speed.*
   - *Motor imbalance: special care is required for operation at 50 or 60 Hz and higher frequency.*
   - *To avoid resonances, use the Skip frequencies.*
9. The motor fan will be very noisy when the motor speed exceeds 50 or 60Hz.

Special motors:

1. Pole-changing (Dahlander) motor:
   The rated current is differs from that of a standard motor. Please check before operation and select the capacity of the AC motor drive carefully. When changing the pole number the motor needs to be stopped first. If over current occurs during operation or regenerative voltage is too high, please let the motor free run to stop (coast).
2. Submersible motor:
   The rated current is higher than that of a standard motor. Please check before operation and choose the capacity of the AC motor drive carefully. With long motor cable between AC motor drive and motor, available motor torque is reduced.
3. Explosion-proof (Ex) motor:
   Needs to be installed in a safe place and the wiring should comply with the (Ex) requirements. Delta AC Motor Drives are not suitable for (Ex) areas with special precautions.

4. Gear reduction motor:

   The lubricating method of reduction gearbox and speed range for continuous operation will be different and depending on brand. The lubricating function for operating long time at low speed and for high-speed operation needs to be considered carefully.

5. Synchronous motor:

   The rated current and starting current are higher than for standard motors. Please check before operation and choose the capacity of the AC motor drive carefully. When the AC motor drive operates more than one motor, please pay attention to starting and changing the motor.

Power Transmission Mechanism

Pay attention to reduced lubrication when operating gear reduction motors, gearboxes, belts and chains, etc. over longer periods at low speeds. At high speeds of 50/60Hz and above, lifetime reducing noises and vibrations may occur.

Motor torque

The torque characteristics of a motor operated by an AC motor drive and commercial mains power are different.

Below you'll find the torque-speed characteristics of a standard motor (4-pole, 15kW):

AC motor drive

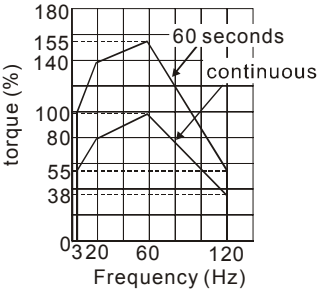

Base freq.: 60Hz
V/F for 220V/60Hz

Motor

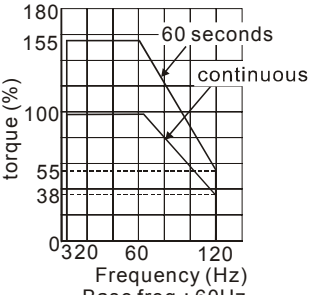

Base freq.: 60Hz
V/F for 220V/60Hz

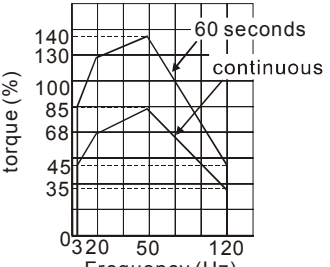

Base freq.: 50Hz
V/F for 220V/50Hz

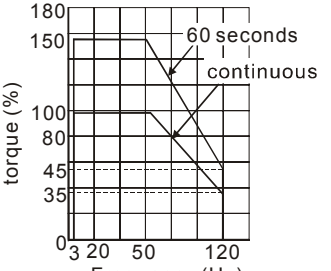

Base freq.: 50Hz
V/F for 220V/50Hz